JUNG

KNX®

The intelligent system for smart buildings

www.knx.org

The trademark

The KNX bus system is a building management system with a control bus system tailored to suit the electrical installations. Leading European companies in electrical installation engineering – including JUNG – founded an organisation with the aim to achieve a standardisation of the system and widespread acceptance of the KNX in Europe and worldwide. KNX is a „Societe Coopérative“ under Belgian law with its headquarters in Brussels. The trademark KNX visually underlines the system compatibility of the products. The purpose of the organisation is to promote building management systems in a standardised form on the European market, to achieve fast, widespread market acceptance and develop the trademark to a seal of quality. Technical guidelines for the system and the products, together with quality regulations will be drawn up by the company accordingly. This will ensure that KNX bus equipment from various manufacturers within a system can communicate with each other.

The KNX system

The demands made on modern electrical installations in private homes and on business premises have changed considerably. More and more emphasis is being placed on safety, operational ease and flexible use. The limits for conventional installations with a confusing number of own functional networks for electrical power, heating, lighting and shutter control, burglar alarm system, smoke, gas and fire detectors, however, have long been reached. Installation and power costs have risen. Subsequent upgrading, renovation and change of system operation is expensive and complicated. The KNX System offers a convincing perspective. The KNX System is an intelligent building management system for measuring, regulating, switching, controlling, signalling and monitoring. Laid additionally to the power supply network, information transmission is via a bus line suitable for all specific applications. This electronic control system does not require a central unit as it is located decentralised in every individual appliance. All consumers connected to this mutual bus line, such as switches, sensors, actuators, displays, control units etc. can exchange information via this communication line which can also be compiled logically for evaluation. The bus line can be laid in line, star or tree structure. All devices can be selected freely and are interactive. The information transmission can contain analogue functions (temperature, time, quantity etc.) and digital functions (yes/no, on/off, light/dark, warm/cold, long/short, more/less). Dimmer functions are of course also possible.

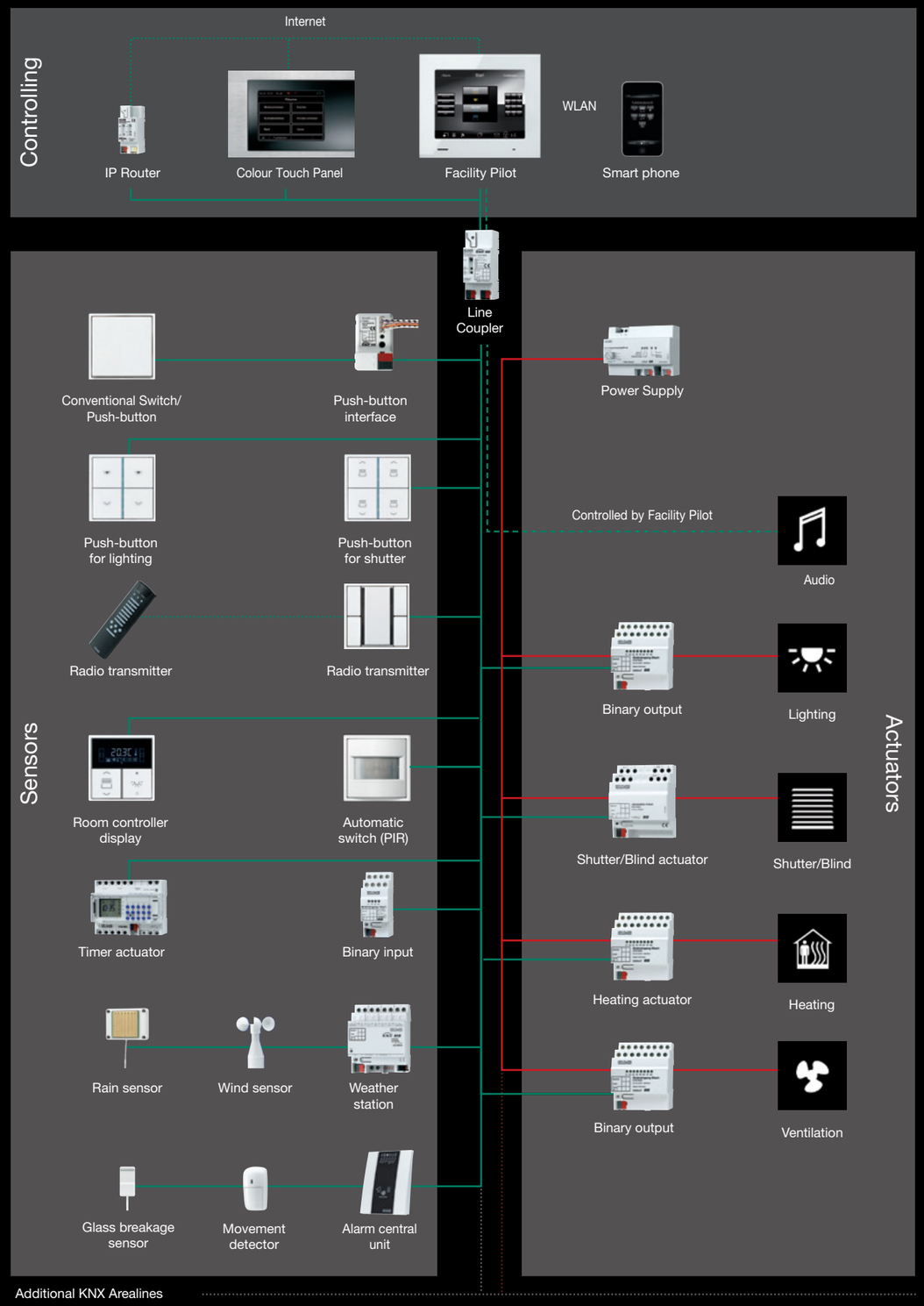

The JUNG KNX System

With KNX, all devices are linked to the system and can communicate with each other. The devices send telegrams along the bus line. These are coupled with an address number and can only be processed by the specified recipients with this address number. More than one recipient can be addressed simultaneously with this address so that it is possible to form groups. The recipient receives the telegram and decodes the message which in the end contains a command – e.g. to switch on/off or dim. Once the command has been carried out, a variation of this can be sent back to the sensor by actuator as confirmation that the command has been carried out. The complete KNX system is split up into lines. A maximum of 64 devices can be connected to each line. Up to 12 lines are connected to the main line by line couplers. The maximum length per line is 1000 m. The lines can be laid in line, star or tree form. The bus management is designed on a multimaster principle, i.e. a central unit is not necessary. The decentralized access system CSMA/CA (carrier sense multiple access/ collision avoidance) ensures fault-free operation of the bus system. Important signals are assigned greater priority to ensure faster, preferential processing of the telegrams. Priorities, devices address, functions etc. are drawn up on a PC using planning software. The program is loaded into the system locally by personal computer. The use of an intelligent building installation system is recommended particularly in those areas where all demands on an optimised installation have to be fulfilled with a maximum degree of flexibility and comfort and a minimum of expenditure.

Heating, ventilation and air-conditioning systems, detection and alarm systems, light and blind/shutter control and load management can be combined and integrated. The same also applies for the „normal“ installations which, with their multifunctional structure, can be designed with much greater flexibility and ease.

The most important components and terminology

Power supply/choke supplies the necessary operating voltage for the connected KNX system equipment via the bus line.

Sensors provide information such as switch commands or physical measured quantities in telegram form via the bus line to the receiver devices (actuators).

Actuators receive telegrams sent by the sensors and convert the incoming commands into action (e.g. switching or dimming).

Equipment units which combine bus lines with each other and forward telegrams to other bus lines or limit to specific lines.

Blind/shutter control

The automatic lowering of blinds/shutters according to room temperature avoids the room being heated up necessarily. The control can be central and decentral. Blinds/shutters mounted outside, are protected against damage from high winds by wind sensors which, coupled with the blind/shutter control, prevent or initiate lowering or raising.

Lighting

Lighting control units can be controlled centrally and decentrally. The illuminance can be reduced by switching off or dimming at programmed times (breaks, weekends, end of working day, company holidays etc.) or according to the room or outside brightness. This saves energy and reduces operating costs as well. New requirements can be met quickly and safely by reparametering if room usage has been changed. Of course, comfortable light scene controls as well as a fully automated partition wall lighting control can be realised.

Heating, ventilation and air-conditioning systems

The reduction of the temperature in rooms not in use (meeting/conference rooms) is controlled by motion detectors. Time-dependent control of the room temperature also saves energy (e.g. at weekends and public holidays). A coupling with the shutter control is recommended to prevent the room from heating up extremely caused by direct sunlight which results additional demands on the air-conditioning system. Displays allow constant control of current temperatures.

Monitoring and alarm installations

Using sensors (door and window contacts), monitors or displays indicate which are open and which are closed. Locking can be initiated electromechanically. Faults in the parts of the building or system are also displayed and documented. This ensures that the complete building‘s installations are monitored.

Entertainment

There is an increasing desire to combine home and building automation with streaming of digital music. This integration is also known as audio multiroom application. For instance lighting and music control can be integrated in scenes, which can be selected at the push of a button from anywhere in the building. Audio streams are transmitted over Ethernet or wireless (IEE 802.11) networks from a server with the open-source software to music players, and in turn controlled by the visualisation package Facility-Pilot. Supported audio streams are for instance Internet Radio, MP3, WAV and Ogg Vorbis. Interfaces enable the coupling of personal computers (PC’s) or neighbouring bus systems to the KNX bus systems. PC’s for programming or service purposes and printers for documentation can be connected.

KNX push-button sensors F 50

The new F 50 push-button modules in the design of the AS, A, CD and LS ranges make a convincing impression even at the first glance through the homogeneous surface appearance provided by the recessed buttons. It is precisely in the case of multiple combinations that a harmonious overall look is created. Also new is the choice of the labelling area: The transparent version is normally supplied as standard. This can optionally be replaced by a coloured version that matches the colour of the buttons. This coloured design cover can be individually customised by the laser engraving or colour printing of symbols or text, in the same way as for the individual buttons. The illuminated labelling area and the coloured status and operation LEDs round out the overall design concept.

The F 50 KNX push-button modules are available in the Standard and Universal versions as 1-, 2-, 3- and 4-gang. To add functionality, the unit may be combined with the push-button extension module.

The A range has an especially light and modern effect with its high-quality plastic or glass frame in various colours.

The soft rounded shapes of the CD range are underscored by a multiplicity of colours and options for high-quality materials.

The LS range has a timeless elegance. The square shape with straight lines, with a narrow or broad frame and made of top-quality materials, fits in superbly into any ambience.

Extensive: labelling area with transparent cover

The imprinting of the extensive labelling area provides a simple and clear allocation of functions. In addition, the buttons can be marked as well. For example, using either laser engraving or symbols applied by colour printing, the information in the labelling area can be supplemented in a meaningful way and the assignment of functions optimised.

Unique: the coloured labelling cover

New and unique in this market are the labelling covers with colours that match the buttons. The overall look is thus one of special quality. Both the coloured covers and the buttons can be individually customised with laser engraving or colour printing, as an additional design feature or of course to optimise the assignment of functions.

Enlightening: the RGB LEDs

In the Universal version the new push-button module has an operating LED and a status LED for each button, in RGB colours. As a result they can be set individually in red, green or blue, entirely as desired. The operating LED can also provide light for orientation. The brightness can be adjusted for all the LEDs, including the illuminated labelling area.

Optimised: the installation

The new push-buttons are especially easy to install thanks to their flat shape and small amount of depth required for installation. The easily accessible connections for the KNX bus and the push-button extension module as a satellite unit are clearly marked and thus make installation easier.

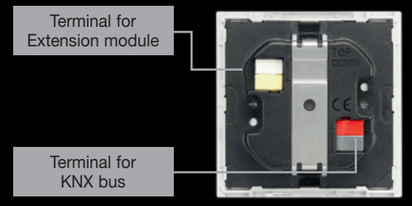

Flexible: connection of the push-button extension module

The functions can be extended by connecting the 1- to 4-gang push-button extension module, while minimising the load on the bus. What is new in the F 50 push-buttons is the option for installation of the extension module at a distance of up to 30 m to provide more flexibility.

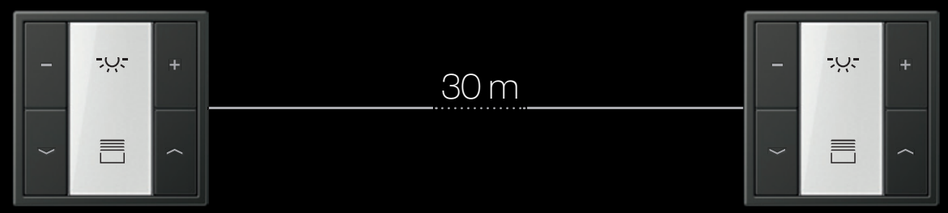

KNX Room controller OLED

JUNG has extended the F 40 push-button module into a new high-end controller with the KNX room controller OLED. The compact room controller with integrated bus coupling unit in the CD and LS design ranges features a high-resolution OLED graphic display with brilliant colours. The operation of the OLED room controller is done by means of large buttons that can be laser-engraved or imprinted individually with symbols or text by means of the JUNG graphics tool. To add functionality, the unit may be combined with the push-button extension module.

High-resolution OLED graphic display

Thanks to its high contrast and the wide viewing angle of 170°, the brilliant OLED display can be read clearly from any angle, and regardless of the height at which it is installed.

There are 30 different symbols to display the basic functions. For clear information at a glance.

Three lines of full text and scrolling text of max. 28 characters provide detailed information on the features executed.

When you control music, the artist and album, for example, are shown in addition to the selected title.

Overview of the functions:

- Push-button sensor functions switching, dimming, blind control, calling up scenes, etc.
- Vertical and horizontal switch functions
- Two red LEDs per button for status display
- Room temperature display and regulation with setpoint selection
- Fan control with fan-coil functionality
- Multi-room control in conjunction with Facility Pilot, depending on the multi-room system used

The KNX room controller OLED is available in the CD and LS ranges and in each case for installation in a flush-mounted socket. Operation is extremely convenient thanks to the two large buttons; assignment of the functions can be optimised individually with symbols by laser engraving or imprinting.

KNX Presence detector / Ceiling detector

The new KNX Standard and Universal presence detectors excel through superb detection capabilities for installation heights of up to 5 m. The compact structure with an integrated bus coupling unit and the option for presence-dependent constant light regulation (Universal version) are further advantages. The 360° detection angle can be divided into three separate 120° portions that can be enabled individually. Additionally, the Universal option has 5 functional blocks that operate independently of each other and to which three PIR sensors may be allocated in various configurations. Each functional block may be configured as desired for use as a presence detector, ceiling detector, or signalling operation. The unit may be optionally set up and operated using an IR remote control. Using a timer, these functional blocks can be switched over to the relevant user-dependent requirements.

A protective cover made of solid steel is available as an additional part for this KNX detector. It protects the unit against damage, for example, from thrown balls if it is installed in a sports hall.

Detection area and range

The detector has an especially homogeneous detection area of around 20 m (when installed at a height of 3 m). This allows precise motion detection in large rooms as well.

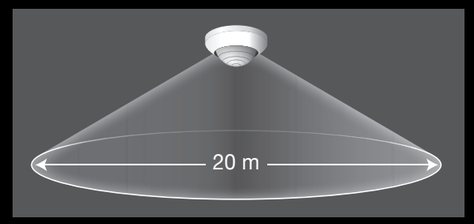

The 360° detection angle can be divided into three separate 120° sections that can be enabled individually by the relevant one of the three PIR sensors. In addition, these sensors can be evaluated individually as required in software so that the “direction of viewing” of the sensors can be modified per parameter (Universal version).

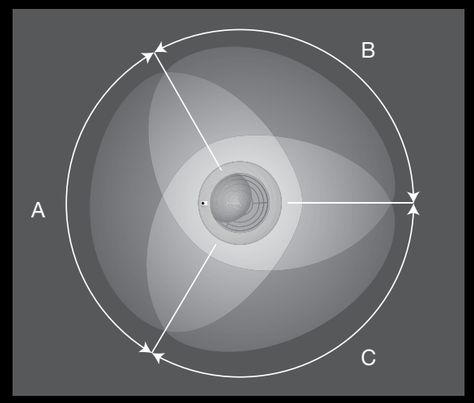

In the Universal version setting and operation can optionally be done by an infrared remote control for extra convenience.

Detailed information:

	Page
KNX – F 50	16
KNX – F 40	19
KNX – A ranges	25
KNX – CD ranges	31
KNX – SL 500	35
KNX – LS ranges	36
KNX – WG 800 surface range	45
KNX – Detectors / System devices	46

	Page
KNX – Actuators	46
KNX – Binary and analogue inputs	48
KNX – Actuators FM	49
KNX – Accessories	49
KNX – Display / Reporting	50
KNX – Multimedia	53
KNX – Alarm	53

L Laser Labelling P Print Labelling N New Product

KNX –F 50

Ref.-no.

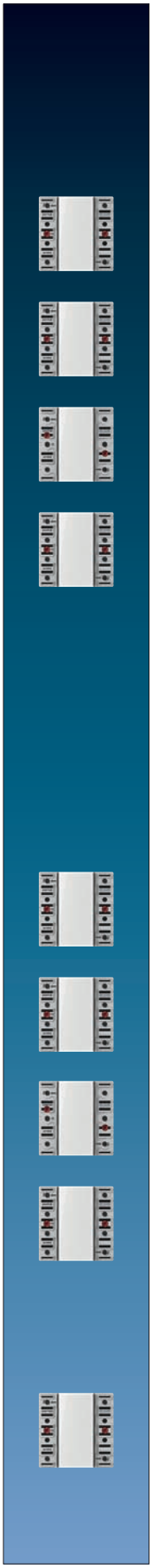

Standard push-button module
including transparent cover ref.-no.:A50NA
Intended use
- Operation of loads, e.g. light on/off, dimming, blinds up/down, brightness values, temperatures, calling up and saving light scenes, etc.
- Installation in wall box according to DIN49073

Standard, 1-gang
ETS product family: Push-button
Product type: 1-gang push-button
N **A 5071 TSM**

Standard, 2-gang
ETS product family: Push-button
Product type: 2-gang push-button
N **A 5072 TSM**

Standard, 3-gang
ETS product family: Push-button
Product type: 3-gang push-button
N **A 5073 TSM**

Standard, 4-gang
ETS product family: Push-button
Product type: 4-gang push-button
N **A 5074 TSM**

Universal push-button module
including transparent cover ref.-no.:A50NA
Intended use
- Operation of loads, e.g. light on/off, dimming, blinds up/down, brightness values, temperatures, calling up and saving light scenes, etc.
- Installation in wall box according to DIN49073
- Connection for a push-button extension module, 1-4 gang

Universal, 1-gang
ETS product family: Push-button
Product type: 1-gang push-button
N **A 5091 TSM**

Universal, 2-gang
ETS product family: Push-button
Product type: 2-gang push-button
N **A 5092 TSM**

Universal, 3-gang
ETS product family: Push-button
Product type: 3-gang push-button
N **A 5093 TSM**

Universal, 4-gang
ETS product family: Push-button
Product type: 4-gang push-button
N **A 5094 TSM**

Push-button extension module
including transparent cover ref.-no.:A50NA
for the extension of the Universal push-button module (ref.-no.:A509..TSM) with up to 4additional push-buttons

1-gang	N	**A 5091 TSEM**
2-gang	N	**A 5092 TSEM**
3-gang	N	**A 5093 TSEM**
4-gang	N	**A 5094 TSEM**

Ref.-no.

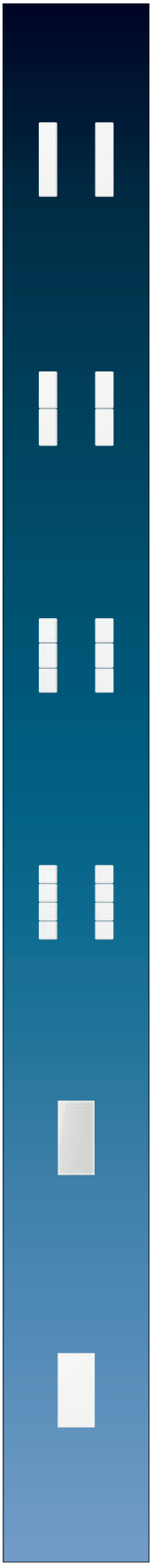

Cover kits for ASand Aranges

Cover kit 1-gang, complete
to clip on push-button module 1-gang
ref.-no.:A5071TSM, A5091TSM, A5212TSM and push-button extension module, ref.-no.:A5091TSEM
breakproof version

ivory	N		L	**A 501 TSA**
white	N		L	**A 501 TSA WW**
black	N		L	**A 501 TSA SW**
aluminium	N	P	L	**A 501 TSA AL**
champagne	N	P		**A 501 TSA CH**
mocha	N			**A 501 TSA MO**

Cover kit 2-gang, complete
to clip on push-button module 2-gang
ref.-no.:A5072TSM, A5092TSM, A5224TSM and push-button extension module, ref.-no.:A5092TSEM
breakproof version

ivory	N		L	**A 502 TSA**
white	N		L	**A 502 TSA WW**
black	N		L	**A 502 TSA SW**
aluminium	N	P	L	**A 502 TSA AL**
champagne	N	P		**A 502 TSA CH**
mocha	N			**A 502 TSA MO**

Cover kit 3-gang, complete
to clip on push-button module 3-gang
ref.-no.:A5073TSM, A5093TSM, A5236TSM and push-button extension module, ref.-no.:A5093TSEM
breakproof version

ivory	N		L	**A 503 TSA**
white	N		L	**A 503 TSA WW**
black	N		L	**A 503 TSA SW**
aluminium	N	P	L	**A 503 TSA AL**
champagne	N	P		**A 503 TSA CH**
mocha	N			**A 503 TSA MO**

Cover kit 4-gang, complete
to clip on push-button module 4-gang
ref.-no.:A5074TSM, A5094TSM, A5248TSM and push-button extension module, ref.-no.:A5094TSEM
breakproof version

ivory	N		L	**A 504 TSA**
white	N		L	**A 504 TSA WW**
black	N		L	**A 504 TSA SW**
aluminium	N	P	L	**A 504 TSA AL**
champagne	N	P		**A 504 TSA CH**
mocha	N			**A 504 TSA MO**

Transparent cover with paper inlay
(Spare part)
to clip on push-button module
ref.-no.:A507..TSM, A509..TSM, A52..TSM and push-button extension module, ref.-no.:A509..TSEM
Also included in delivery of modules.
inscription field 25x52.5mm
breakproof version
paper inlay
pearly N **A 50 NA**

Neutral cover
to clip on push-button module
ref.-no.:A507..TSM, A509..TSM, A52..TSM and push-button extension module, ref.-no.:A509..TSEM
dimensions: 25 x 55 mm
breakproof version

ivory	N		L	**A 50 NA W**
white	N		L	**A 50 NA WW**
black	N		L	**A 50 NA SW**
aluminium	N	P	L	**A 50 NA AL**
champagne	N	P		**A 50 NA CH**
mocha	N			**A 50 NA MO**

Professional inscription see www.jung.de/gt

KNX – F 50

Ref.-no.

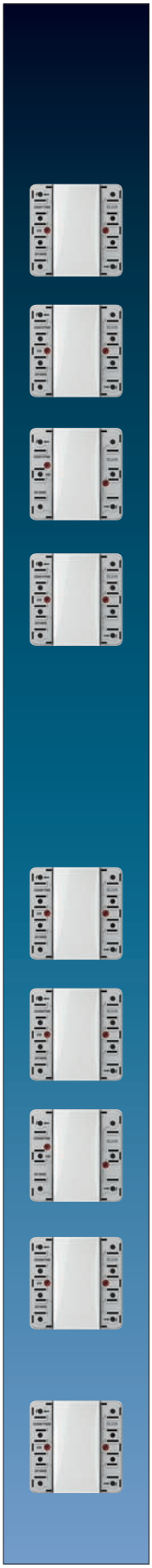

Standard push-button module
including transparent cover ref.-no.: CD 50 NA
Intended use
- Operation of loads, e.g. light on/off, dimming, blinds up/down, brightness values, temperatures, calling up and saving light scenes, etc.
- Installation in wall box according to DIN 49073

Standard, 1-gang
ETS product family: Push-button
Product type: 1-gang push-button
N **CD 5071 TSM**

Standard, 2-gang
ETS product family: Push-button
Product type: 2-gang push-button
N **CD 5072 TSM**

Standard, 3-gang
ETS product family: Push-button
Product type: 3-gang push-button
N **CD 5073 TSM**

Standard, 4-gang
ETS product family: Push-button
Product type: 4-gang push-button
N **CD 5074 TSM**

Universal push-button module
including transparent cover ref.-no.: CD 50 NA
Intended use
- Operation of loads, e.g. light on/off, dimming, blinds up/down, brightness values, temperatures, calling up and saving light scenes, etc.
- Installation in wall box according to DIN 49073
- Connection for a push-button extension module, 1-4 gang

Universal, 1-gang
ETS product family: Push-button
Product type: 1-gang push-button
N **CD 5091 TSM**

Universal, 2-gang
ETS product family: Push-button
Product type: 2-gang push-button
N **CD 5092 TSM**

Universal, 3-gang
ETS product family: Push-button
Product type: 3-gang push-button
N **CD 5093 TSM**

Universal, 4-gang
ETS product family: Push-button
Product type: 4-gang push-button
N **CD 5094 TSM**

Push-button extension module
including transparent cover ref.-no.: CD 50 NA
for the extension of the Universal push-button module
(ref.-no.: CD 509.. TSM) with up to 4 additional push-buttons

1-gang	N	**CD 5091 TSEM**
2-gang	N	**CD 5092 TSEM**
3-gang	N	**CD 5093 TSEM**
4-gang	N	**CD 5094 TSEM**

Ref.-no.

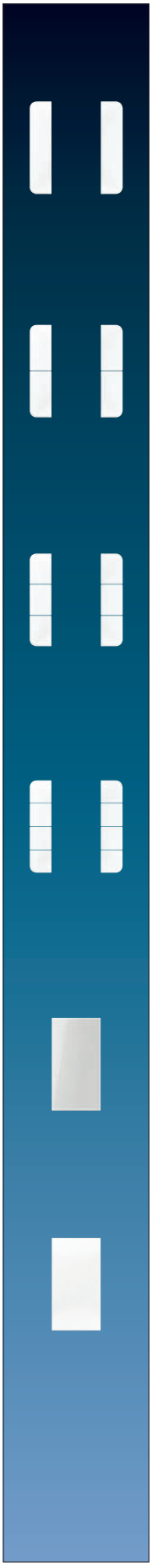

Cover kits for CD ranges

Cover kit 1-gang, complete
to clip on push-button module 1-gang
ref.-no.: CD 5071 TSM, CD 5091 TSM, CD 5212 TSM and push-button extension module, ref.-no.: CD 5091 TSEM
breakproof version

ivory	N	L **CD 501 TSA**
white	N	L **CD 501 TSA WW**
grey	N	L **CD 501 TSA GR**
light grey	N	L **CD 501 TSA LG**
black	N	L **CD 501 TSA SW**

Cover kit 2-gang, complete
to clip on push-button module 2-gang
ref.-no.: CD 5072 TSM, CD 5092 TSM, CD 5224 TSM and push-button extension module, ref.-no.: CD 5092 TSEM
breakproof version

ivory	N	L **CD 502 TSA**
white	N	L **CD 502 TSA WW**
grey	N	L **CD 502 TSA GR**
light grey	N	L **CD 502 TSA LG**
black	N	L **CD 502 TSA SW**

Cover kit 3-gang, complete
to clip on push-button module 3-gang
ref.-no.: CD 5073 TSM, CD 5093 TSM, CD 5236 TSM and push-button extension module, ref.-no.: CD 5093 TSEM
breakproof version

ivory	N	L **CD 503 TSA**
white	N	L **CD 503 TSA WW**
grey	N	L **CD 503 TSA GR**
light grey	N	L **CD 503 TSA LG**
black	N	L **CD 503 TSA SW**

Cover kit 4-gang, complete
to clip on push-button module 4-gang
ref.-no.: CD 5074 TSM, CD 5094 TSM, CD 5248 TSM and push-button extension module, ref.-no.: CD 5094 TSEM
breakproof version

ivory	N	L **CD 504 TSA**
white	N	L **CD 504 TSA WW**
grey	N	L **CD 504 TSA GR**
light grey	N	L **CD 504 TSA LG**
black	N	L **CD 504 TSA SW**

Transparent cover with paper inlay
(Spare part)
to clip on push-button module
ref.-no.: CD 507.. TSM, CD 509.. TSM, CD 52.. TSM and push-button extension module, ref.-no.: CD 509.. TSEM
Also included in delivery of modules.
inscription field 33 x 64 mm
breakproof version
paper inlay
pearly N **CD 50 NA**

Neutral cover
to clip on push-button module
ref.-no.: CD 507.. TSM, CD 509.. TSM, CD 52.. TSM and push-button extension module, ref.-no.: CD 509.. TSEM
dimensions: 33 x 68 mm
breakproof version

ivory	N	L **CD 50 NA W**
white	N	L **CD 50 NA WW**
grey	N	L **CD 50 NA GR**
light grey	N	L **CD 50 NA LG**
black	N	L **CD 50 NA SW**

Professional inscription see www.jung.de/gt

KNX – F 50

Ref.-no.

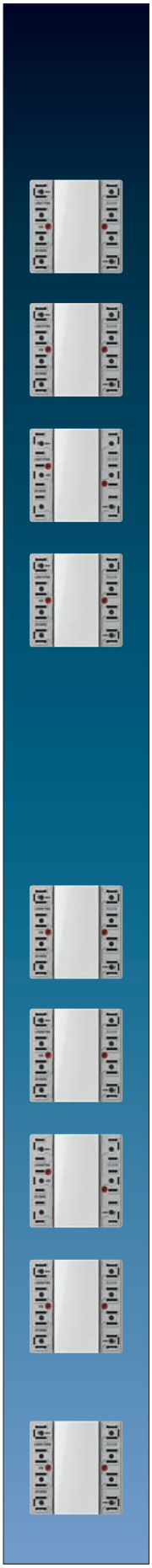

Standard push-button module
including transparent cover ref.-no.: LS 50 NA
Intended use
- Operation of loads, e.g. light on/off, dimming, blinds up/down, brightness values, temperatures, calling up and saving light scenes, etc.
- Installation in wall box according to DIN 49073

Standard, 1-gang
ETS product family: Push-button
Product type: 1-gang push-button
N **LS 5071 TSM**

Standard, 2-gang
ETS product family: Push-button
Product type: 2-gang push-button
N **LS 5072 TSM**

Standard, 3-gang
ETS product family: Push-button
Product type: 3-gang push-button
N **LS 5073 TSM**

Standard, 4-gang
ETS product family: Push-button
Product type: 4-gang push-button
N **LS 5074 TSM**

Universal push-button module
including transparent cover ref.-no.: LS 50 NA
Intended use
- Operation of loads, e.g. light on/off, dimming, blinds up/down, brightness values, temperatures, calling up and saving light scenes, etc.
- Installation in wall box according to DIN 49073
- Connection for a push-button extension module, 1-4 gang

Universal, 1-gang
ETS product family: Push-button
Product type: 1-gang push-button
N **LS 5091 TSM**

Universal, 2-gang
ETS product family: Push-button
Product type: 2-gang push-button
N **LS 5092 TSM**

Universal, 3-gang
ETS product family: Push-button
Product type: 3-gang push-button
N **LS 5093 TSM**

Universal, 4-gang
ETS product family: Push-button
Product type: 4-gang push-button
N **LS 5094 TSM**

Push-button extension module
including transparent cover ref.-no.: LS 50 NA
for the extension of the Universal push-button module
(ref.-no.: LS 509.. TSM) with up to 4 additional push-buttons

1-gang	N	**LS 5091 TSEM**
2-gang	N	**LS 5092 TSEM**
3-gang	N	**LS 5093 TSEM**
4-gang	N	**LS 5094 TSEM**

Ref.-no.

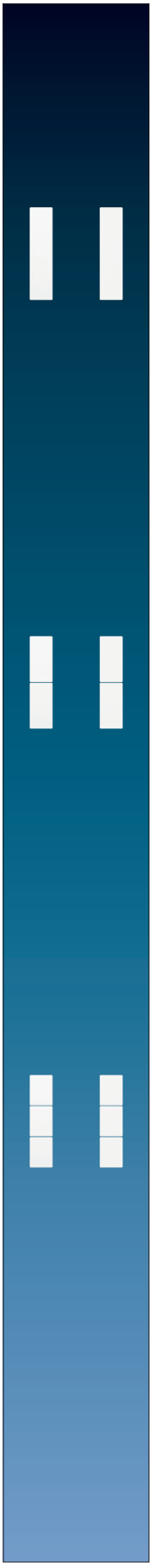

Cover kits for LS ranges and Flat Design

Cover kit 1-gang, complete
to clip on push-button module 1-gang
ref.-no.: LS 5071 TSM, LS 5091 TSM, LS 5212 TSM and push-button extension module, ref.-no.: LS 5091 TSEM

breakproof version				
ivory	N		L	**LS 501 TSA**
white	N		L	**LS 501 TSA WW**
light grey	N		L	**LS 501 TSA LG**
black	N		L	**LS 501 TSA SW**
metal versions				
aluminium	N	P	L	**AL 2501 TSA**
stainless steel	N		L	**ES 2501 TSA**
anthracite (aluminium lacquered)	N		L	**AL 2501 TSA AN**
chrome	N			**GCR 2501 TSA**
gold-coloured	N			**GO 2501 TSA**
Gold 24 carat	N			**LS 501 TSA GGO**
classic brass	N	P		**ME 2501 TSA C**
antique brass	N			**ME 2501 TSA AT**
dark brass	N			**ME 2501 TSA D**

Cover kit 2-gang, complete
to clip on push-button module 2-gang
ref.-no.: LS 5072 TSM, LS 5092 TSM, LS 5224 TSM and push-button extension module, ref.-no.: LS 5092 TSEM

breakproof version				
ivory	N		L	**LS 502 TSA**
white	N		L	**LS 502 TSA WW**
light grey	N		L	**LS 502 TSA LG**
black	N		L	**LS 502 TSA SW**
metal versions				
aluminium	N	P	L	**AL 2502 TSA**
stainless steel	N		L	**ES 2502 TSA**
anthracite (aluminium lacquered)	N		L	**AL 2502 TSA AN**
chrome	N			**GCR 2502 TSA**
gold-coloured	N			**GO 2502 TSA**
Gold 24 carat	N			**LS 502 TSA GGO**
classic brass	N	P		**ME 2502 TSA C**
antique brass	N			**ME 2502 TSA AT**
dark brass	N			**ME 2502 TSA D**

Cover kit 3-gang, complete
to clip on push-button module 3-gang
ref.-no.: LS 5073 TSM, LS 5093 TSM, LS 5236 TSM and push-button extension module, ref.-no.: LS 5093 TSEM

breakproof version				
ivory	N		L	**LS 503 TSA**
white	N		L	**LS 503 TSA WW**
light grey	N		L	**LS 503 TSA LG**
black	N		L	**LS 503 TSA SW**
metal versions				
aluminium	N	P	L	**AL 2503 TSA**
stainless steel	N		L	**ES 2503 TSA**
anthracite (aluminium lacquered)	N		L	**AL 2503 TSA AN**
chrome	N			**GCR 2503 TSA**
gold-coloured	N			**GO 2503 TSA**
Gold 24 carat	N			**LS 503 TSA GGO**
classic brass	N	P		**ME 2503 TSA C**
antique brass	N			**ME 2503 TSA AT**
dark brass	N			**ME 2503 TSA D**

KNX – F 50

Ref.-no.

Cover kits for LS ranges and Flat Design

Cover kit 4-gang, complete
to clip on push-button module 4-gang
ref.-no.: LS 5074 TSM, LS 5094 TSM, LS 5248 TSM and push-button extension module, ref.-no.: LS 5094 TSEM

breakproof version

ivory	N	L	**LS 504 TSA**
white	N	L	**LS 504 TSA WW**
light grey	N	L	**LS 504 TSA LG**
black	N	L	**LS 504 TSA SW**

metal versions

aluminium	N	P	L	**AL 2504 TSA**
stainless steel	N		L	**ES 2504 TSA**
anthracite (aluminium lacquered)	N		L	**AL 2504 TSA AN**
chrome	N			**GCR 2504 TSA**
gold-coloured	N			**GO 2504 TSA**
Gold 24 carat	N			**LS 504 TSA GGO**
classic brass	N	P		**ME 2504 TSA C**
antique brass	N			**ME 2504 TSA AT**
dark brass	N			**ME 2504 TSA D**

Transparent cover with paper inlay
(Spare part)
to clip on push-button module
ref.-no.: LS 507.. TSM, LS 509.. TSM, LS 52.. TSM and push-button extension module, ref.-no.: LS 509.. TSEM
Also included in delivery of modules.
inscription field 33 x 67.5 mm

breakproof version

paper inlay pearly	N	**LS 50 NA**

Neutral cover
to clip on push-button module
ref.-no.: LS 507.. TSM, LS 509.. TSM, LS 52.. TSM and push-button extension module, ref.-no.: LS 509.. TSEM
dimensions: 33 x 70.5 mm

breakproof version

ivory	N	L	**LS 50 NA W**
white	N	L	**LS 50 NA WW**
light grey	N	L	**LS 50 NA LG**
black	N	L	**LS 50 NA SW**

metal versions (lacquered)

aluminium	N	P	**AL 50 NA-L**
stainless steel	N		**ES 50 NA-L**
anthracite	N		**AL 50 NA AN-L**
classic brass	N		**ME 50 NA C-L**
antique brass	N		**ME 50 NA AT-L**
dark brass	N		**ME 50 NA D-L**

Professional inscription see www.jung.de/gt

KNX – F 40

Ref.-no.

Room controller display (RCD) module, 2-gang
can be extended by means of a push-button extension module, ref.-no.: 409.. TSEM

for CD ranges
N **RCD CD 4092 M**

for LS ranges
N **RCD LS 4092 M**

recommended mounting height: 1.5 m

Intended use
- Operation of consumers, e.g. lights on/off, dimming, blinds/shutters up/down, brightness values, temperatures, storing and recalling of light scenes etc.
- Room temperature control
- Fan coil application with up to 4 fan speeds and auto function
- LCD display is freely programmable (14 byte string text) with up to 4 pages with up to 3 lines
- Installation in mounting box according to DIN 49073

Product characteristics
- Push-button functions for switching, dimming, blinds control, valuators, light scenes, etc.
- Vertical and horizontal key/rocker functions
- Two red LEDs per control key as status or operation indicators
- Display of values and texts
- Running text display for one or two messages with max. 14 characters
- Integrated room temperature controller
- Room temperature control with setpoint value preset
- Display of room temperature and setpoint temperature
- Indication of outside temperature (only with external sensor)
- Integrated bus coupling unit
- In combination with Facitility Pilot "Multi-Room Control": music play control, display of music titles, artists, etc.
- Display unit for the KNX central alarm unit
- Connection for a push-button extension module, 1-4 gang

Room controller display (RCD) compact module
can be extended by means of a push-button extension module, ref.-no.: 409.. TSEM
Adapter frames are included in delivery: ref.-no. LS 4 AR for LS ranges (pre-mounted) and ref.-no. CD 4 AR for CD ranges. AS / A ranges without adapter frame.
4093 KRM TS D

recommended mounting height: 1.5 m

Intended use
- Measurement and feedback control of the room temperature
- Operation of loads, e.g. light on/off, dimming, blinds up/down, brightness values, temperatures, calling up and saving light scenes, etc.
- Installation in wall box according to DIN 49 073

KNX – F 40

Ref.-no.

Push-button module with integrated BCU
Adapter frames are included in delivery: ref.-no. LS 4 AR for LS ranges (pre-mounted) and ref.-no. CD 4 AR for CD ranges. AS / A ranges without adapter frame.

Standard, 1-gang
ETS product family: Push-button
Product type: 1-gang push-button
1 blue LED: operation indication
1 red LED: status indication
4071 TSM

Standard, 2-gang
ETS product family: Push-button
Product type: 2-gang push-button
1 blue LED: operation indication
2 red LED: status indication
4072 TSM

Standard, 3-gang
ETS product family: Push-button
Product type: 3-gang push-button
1 blue LED: operation indication
3 red LED: status indication
4073 TSM

Standard, 4-gang
ETS product family: Push-button
Product type: 4-gang push-button
1 blue LED: operation indication
4 red LED: status indication
4074 TSM

Universal, 1-gang
ETS product family: Push-button
Product type: 1-gang push-button
1 blue LED: operation indication
2 red LED: status indication
4091 TSM

Universal, 2-gang
ETS product family: Push-button
Product type: 2-gang push-button
1 blue LED: operation indication
4 red LED: status indication
4092 TSM

Universal, 3-gang
ETS product family: Push-button
Product type: 3-gang push-button
1 blue LED: operation indication
6 red LED: status indication
4093 TSM

Universal, 4-gang
ETS product family: Push-button
Product type: 4-gang push-button
1 blue LED: operation indication
8 red LED: status indication
4094 TSM

Ref.-no.

Push-button extension module
for the extension of up to 4 additional push-buttons for the devices:
- Universal push-button module (ref.-no. 409.. TSM)
- Room controller display compact module (ref.-no. 4093 KRM TS D)
- Room controller display module 2-gang (ref.-no. RCD .. 4092 M)
- Smart Control KNX (ref.-no. SC 1000 KNX)

preferred installation: vertical
Adapter frames are included in delivery: ref.-no. LS 4 AR for LS ranges (pre-mounted) and ref.-no. CD 4 AR for CD ranges. AS / A ranges without adapter frame.
red LED: status indication

1-gang	**4091 TSEM**
2-gang	**4092 TSEM**
3-gang	**4093 TSEM**
4-gang	**4094 TSEM**

Cover kits for CD ranges

Cover kit, complete
to clip on room controller display module 2-gang
ref.-no.: RCD CD 4092 M
breakproof version

ivory	N	L	**RCD CD 4092 TSA**
white	N	L	**RCD CD 4092 TSA WW**
grey	N	L	**RCD CD 4092 TSA GR**
light grey	N	L	**RCD CD 4092 TSA LG**
black	N	L	**RCD CD 4092 TSA SW**

Cover kits for LS ranges and Flat Design

Cover kit, complete
to clip on room controller display module 2-gang
ref.-no.: RCD LS 4092 M
breakproof version

ivory	N		L	**RCD LS 4092 TSA**
white	N		L	**RCD LS 4092 TSA WW**
light grey	N		L	**RCD LS 4092 TSA LG**
black	N		L	**RCD LS 4092 TSA SW**
metal versions				
aluminium	N	P	L	**RCD AL 4092 TSA**
stainless steel	N		L	**RCD ES 4092 TSA**
anthracite (aluminium lacquered)	N		L	**RCD AL 4092 TSA AN**
classic brass	N	P		**RCD ME 4092 TSA C**
antique brass	N			**RCD ME 4092 TSA AT**
dark brass	N			**RCD ME 4092 TSA D**

Cover kits for AS and A ranges

Cover kit, complete
to clip on room controller display compact module
ref.-no.: 4093 KRM TS D
breakproof version

ivory		L	**A 4093 TSA**
white		L	**A 4093 TSA WW**
black		L	**A 4093 TSA SW**
aluminium	P	L	**A 4093 TSA AL**
champagne	P		**A 4093 TSA CH**
mocha			**A 4093 TSA MO**

KNX – F 40

Ref.-no.

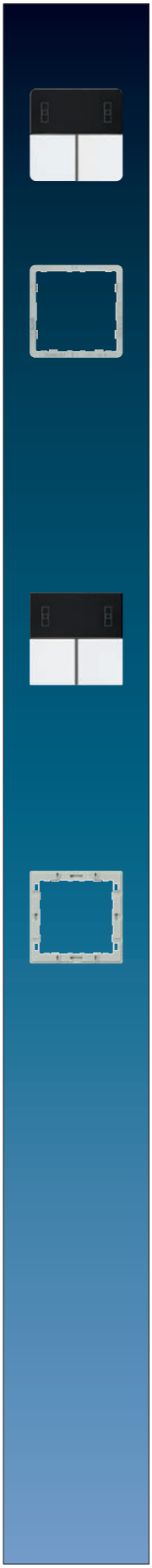

Cover kits for CD ranges

Cover kit, complete
to clip on room controller display compact module
ref.-no.: 4093 KRM TS D
breakproof version

ivory	L	**CD 4093 TSA**
white	L	**CD 4093 TSA WW**
grey	L	**CD 4093 TSA GR**
light grey	L	**CD 4093 TSA LG**
black	L	**CD 4093 TSA SW**

Adapter frame
(Spare part)
to combine push-button modules with CD ranges
Also included in delivery of modules.
CD 4 AR

Cover kits for LS ranges and Flat Design

Cover kit, complete
to clip on room controller display compact module
ref.-no.: 4093 KRM TS D
breakproof version

ivory		L	**LS 4093 TSA**
white		L	**LS 4093 TSA WW**
light grey		L	**LS 4093 TSA LG**
black		L	**LS 4093 TSA SW**
metal versions			
aluminium	P	L	**AL 4093 TSA**
stainless steel		L	**ES 4093 TSA**
anthracite (aluminium lacquered)		L	**AL 4093 TSA AN**
classic brass	P		**ME 4093 TSA C**
antique brass			**ME 4093 TSA AT**
dark brass			**ME 4093 TSA D**

Adapter frame
(Spare part)
to combine push-button modules with LS ranges and Flat Design
Also included in delivery of modules.
LS 4 AR

Ref.-no.

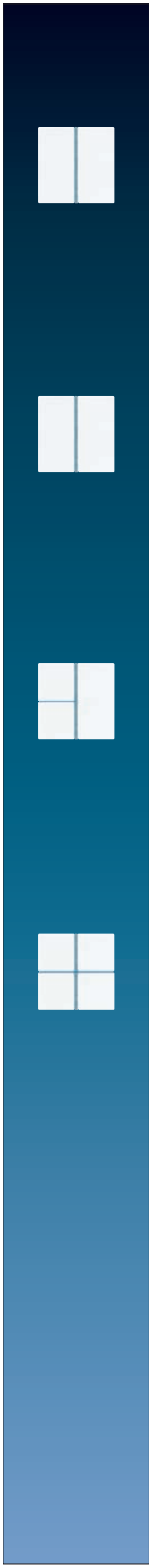

Cover kits for AS and A ranges

Cover kit 1-gang, complete
to clip on push-button module 1-gang
ref.-no.: 4071 TSM, 4091 TSM, 4212 TSM,
push-button extension module, ref.-no.: 4091 TSEM and
push-button module, ref.-no.: 4008 TSM
breakproof version

ivory		L	**A 401 TSA**
white		L	**A 401 TSA WW**
black		L	**A 401 TSA SW**
aluminium	P	L	**A 401 TSA AL**
champagne	P		**A 401 TSA CH**
mocha			**A 401 TSA MO**

Cover kit 2-gang, complete
to clip on push-button module 2-gang
ref.-no.: 4072 TSM, 4092 TSM, 4224 TSM,
push-button extension module, ref.-no.: 4092 TSEM and
push-button module, ref.-no.: 4008 TSM
breakproof version

ivory		L	**A 402 TSA**
white		L	**A 402 TSA WW**
black		L	**A 402 TSA SW**
aluminium	P	L	**A 402 TSA AL**
champagne	P		**A 402 TSA CH**
mocha			**A 402 TSA MO**

Cover kit 3-gang, complete
to clip on push-button module 3-gang
ref.-no.: 4073 TSM, 4093 TSM, 4236 TSM,
push-button extension module, ref.-no.: 4093 TSEM and
push-button module, ref.-no.: 4008 TSM
breakproof version

ivory		L	**A 403 TSA**
white		L	**A 403 TSA WW**
black		L	**A 403 TSA SW**
aluminium	P	L	**A 403 TSA AL**
champagne	P		**A 403 TSA CH**
mocha			**A 403 TSA MO**

Cover kit 4-gang, complete
to clip on push-button module 4-gang
ref.-no.: 4074 TSM, 4094 TSM, 4248 TSM,
push-button extension module, ref.-no.: 4094 TSEM and
push-button module, ref.-no.: 4008 TSM
breakproof version

ivory		L	**A 404 TSA**
white		L	**A 404 TSA WW**
black		L	**A 404 TSA SW**
aluminium	P	L	**A 404 TSA AL**
champagne	P		**A 404 TSA CH**
mocha			**A 404 TSA MO**

KNX – F 40

Ref.-no.

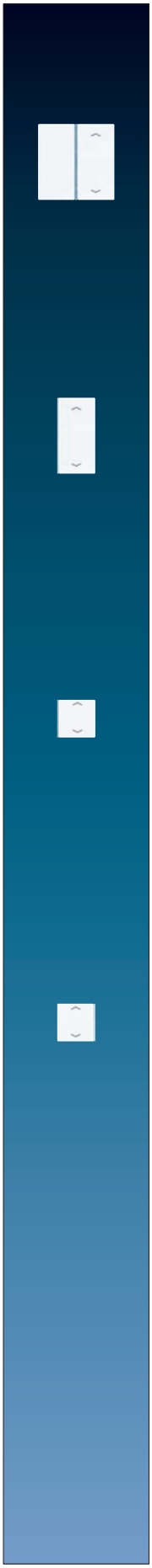

Covers with symbols for AS and A ranges

Cover 1-gang with symbols ▲▼
to clip on push-button module 1-gang
ref.-no.: 4071 TSM, 4091 TSM, 4212 TSM,
push-button extension module, ref.-no.: 4091 TSEM and
push-button module, ref.-no.: 4008 TSM
breakproof version

ivory	**A 401 TSAP**
white	**A 401 TSAP WW**
black	**A 401 TSAP SW**
aluminium	**A 401 TSAP AL**
champagne	**A 401 TSAP CH**
mocha	**A 401 TSAP MO**

Cover 2-gang with symbols ▲▼
to exchange the covers of the cover kit 2-gang
ref.-no.: A 402 TSA..
and the right cover of the cover kit 3-gang
ref.-no.: A 403 TSA..
breakproof version

ivory	**A 402 TSAP**
white	**A 402 TSAP WW**
black	**A 402 TSAP SW**
aluminium	**A 402 TSAP AL**
champagne	**A 402 TSAP CH**
mocha	**A 402 TSAP MO**

Cover 4-gang with symbols ▲▼
to exchange the top left cover of the cover kit 3-gang
ref.-no.: A 403 TSA..
and top left and bottom right cover of the cover kit 4-gang
ref.-no.: A 404 TSA..
to exchange the bottom right cover of the cover kit
ref.-no.: A 4093 TSA..
breakproof version

ivory	**A 404 TSAP 14**
white	**A 404 TSAP WW 14**
black	**A 404 TSAP SW 14**
aluminium	**A 404 TSAP AL 14**
champagne	**A 404 TSAP CH 14**
mocha	**A 404 TSAP MO 14**

Cover 4-gang with symbols ▲▼
to exchange the bottom left cover of the cover kit 3-gang
ref.-no.: A 403 TSA..
and top right and bottom left cover of the cover kit 4-gang
ref.-no.: A 404 TSA..
to exchange the bottom left cover of the cover kit
ref.-no.: A 4093 TSA..
breakproof version

ivory	**A 404 TSAP 23**
white	**A 404 TSAP WW 23**
black	**A 404 TSAP SW 23**
aluminium	**A 404 TSAP AL 23**
champagne	**A 404 TSAP CH 23**
mocha	**A 404 TSAP MO 23**

Ref.-no.

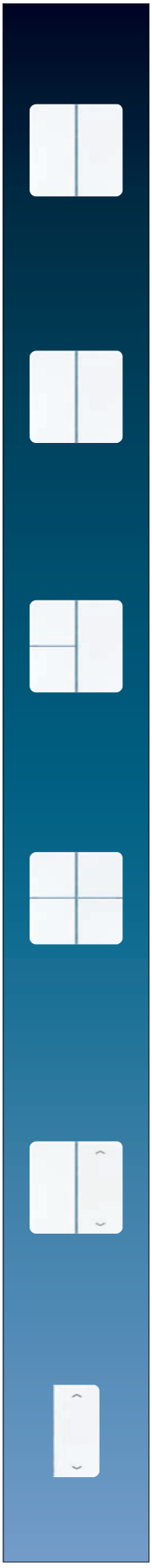

Cover kits for CD ranges

Cover kit 1-gang, complete
to clip on push-button module 1-gang
ref.-no.: 4071 TSM, 4091 TSM, 4212 TSM,
push-button extension module, ref.-no.: 4091 TSEM and
push-button module, ref.-no.: 4008 TSM
breakproof version

ivory	L **CD 401 TSA**
white	L **CD 401 TSA WW**
grey	L **CD 401 TSA GR**
light grey	L **CD 401 TSA LG**
black	L **CD 401 TSA SW**

Cover kit 2-gang, complete
to clip on push-button module 2-gang
ref.-no.: 4072 TSM, 4092 TSM, 4224 TSM,
push-button extension module, ref.-no.: 4092 TSEM and
push-button module, ref.-no.: 4008 TSM
breakproof version

ivory	L **CD 402 TSA**
white	L **CD 402 TSA WW**
grey	L **CD 402 TSA GR**
light grey	L **CD 402 TSA LG**
black	L **CD 402 TSA SW**

Cover kit 3-gang, complete
to clip on push-button module 3-gang
ref.-no.: 4073 TSM, 4093 TSM, 4236 TSM,
push-button extension module, ref.-no.: 4093 TSEM and
push-button module, ref.-no.: 4008 TSM
breakproof version

ivory	L **CD 403 TSA**
white	L **CD 403 TSA WW**
grey	L **CD 403 TSA GR**
light grey	L **CD 403 TSA LG**
black	L **CD 403 TSA SW**

Cover kit 4-gang, complete
to clip on push-button module 4-gang
ref.-no.: 4074 TSM, 4094 TSM, 4248 TSM,
push-button extension module, ref.-no.: 4094 TSEM and
push-button module, ref.-no.: 4008 TSM
breakproof version

ivory	L **CD 404 TSA**
white	L **CD 404 TSA WW**
grey	L **CD 404 TSA GR**
light grey	L **CD 404 TSA LG**
black	L **CD 404 TSA SW**

Covers with symbols for CD ranges

Cover 1-gang with symbols ▲▼
to clip on push-button module 1-gang
ref.-no.: 4071 TSM, 4091 TSM, 4212 TSM,
push-button extension module, ref.-no.: 4091 TSEM and
push-button module, ref.-no.: 4008 TSM
breakproof version

ivory	**CD 401 TSAP**
white	**CD 401 TSAP WW**
grey	**CD 401 TSAP GR**
light grey	**CD 401 TSAP LG**
black	**CD 401 TSAP SW**

Cover 2-gang with symbols ▲▼
to exchange the covers of the cover kit 2-gang
ref.-no.: CD 402 TSA..
and the right cover of the cover kit 3-gang
ref.-no.: CD 403 TSA..
breakproof version

ivory	**CD 402 TSAP**
white	**CD 402 TSAP WW**
grey	**CD 402 TSAP GR**
light grey	**CD 402 TSAP LG**
black	**CD 402 TSAP SW**

KNX – F 40

Ref.-no.

Covers with symbols for CD ranges

Cover 4-gang with symbols ▲▼
to exchange the top left cover of the cover kit 3-gang
ref.-no.: CD 403 TSA..
and top left and bottom right cover of the cover kit 4-gang
ref.-no.: CD 404 TSA..
to exchange the bottom right cover of the cover kit
ref.-no.: CD 4093 TSA..
to exchange the bottom right cover of the cover kit
ref.-no.: RCD CD 4092 TSA ..

breakproof version

ivory	**CD 404 TSAP 14**
white	**CD 404 TSAP WW 14**
grey	**CD 404 TSAP GR 14**
light grey	**CD 404 TSAP LG 14**
black	**CD 404 TSAP SW 14**

Cover 4-gang with symbols ▲▼
to exchange the bottom left cover of the cover kit 3-gang
ref.-no.: CD 403 TSA..
and top right and bottom left cover of the cover kit 4-gang
ref.-no.: CD 404 TSA..
to exchange the bottom left cover of the cover kit
ref.-no.: CD 4093 TSA..
to exchange the bottom left cover of the cover kit
ref.-no.: RCD CD 4092 TSA ..

breakproof version

ivory	**CD 404 TSAP 23**
white	**CD 404 TSAP WW 23**
grey	**CD 404 TSAP GR 23**
light grey	**CD 404 TSAP LG 23**
black	**CD 404 TSAP SW 23**

Adapter frame
(Spare part)
to combine push-button modules with CD ranges
Also included in delivery of modules.
CD 4 AR

Ref.-no.

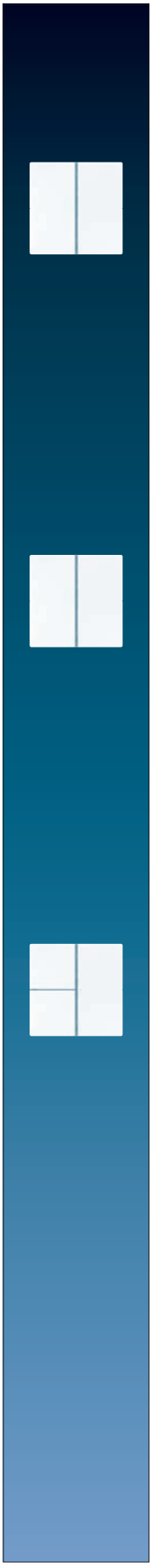

Cover kits for LS ranges and Flat Design

Cover kit 1-gang, complete
to clip on push-button module 1-gang
ref.-no.: 4071 TSM, 4091 TSM, 4212 TSM,
push-button extension module, ref.-no.: 4091 TSEM and
push-button module, ref.-no.: 4008 TSM

breakproof version

ivory		L **LS 401 TSA**
white		L **LS 401 TSA WW**
light grey		L **LS 401 TSA LG**
black		L **LS 401 TSA SW**
metal versions		
aluminium	P	L **AL 2401 TSA**
stainless steel		L **ES 2401 TSA**
anthracite (aluminium lacquered)		L **AL 2401 TSA AN**
classic brass	P	**ME 2401 TSA C**
antique brass		**ME 2401 TSA AT**
dark brass		**ME 2401 TSA D**

Cover kit 2-gang, complete
to clip on push-button module 2-gang
ref.-no.: 4072 TSM, 4092 TSM, 4224 TSM,
push-button extension module, ref.-no.: 4092 TSEM and
push-button module, ref.-no.: 4008 TSM

breakproof version

ivory		L **LS 402 TSA**
white		L **LS 402 TSA WW**
light grey		L **LS 402 TSA LG**
black		L **LS 402 TSA SW**
metal versions		
aluminium	P	L **AL 2402 TSA**
stainless steel		L **ES 2402 TSA**
anthracite (aluminium lacquered)		L **AL 2402 TSA AN**
classic brass	P	**ME 2402 TSA C**
antique brass		**ME 2402 TSA AT**
dark brass		**ME 2402 TSA D**

Cover kit 3-gang, complete
to clip on push-button module 3-gang
ref.-no.: 4073 TSM, 4093 TSM, 4236 TSM,
push-button extension module, ref.-no.: 4093 TSEM and
push-button module, ref.-no.: 4008 TSM

breakproof version

ivory		L **LS 403 TSA**
white		L **LS 403 TSA WW**
light grey		L **LS 403 TSA LG**
black		L **LS 403 TSA SW**
metal versions		
aluminium	P	L **AL 2403 TSA**
stainless steel		L **ES 2403 TSA**
anthracite (aluminium lacquered)		L **AL 2403 TSA AN**
classic brass	P	**ME 2403 TSA C**
antique brass		**ME 2403 TSA AT**
dark brass		**ME 2403 TSA D**

KNX – F 40

Ref.-no.

Cover kits for LS ranges and Flat Design

Cover kit 4-gang, complete
to clip on push-button module 4-gang
ref.-no.: 4074 TSM, 4094 TSM, 4248 TSM,
push-button extension module, ref.-no.: 4094 TSEM and
push-button module, ref.-no.: 4008 TSM

breakproof version		
ivory	L	**LS 404 TSA**
white	L	**LS 404 TSA WW**
light grey	L	**LS 404 TSA LG**
black	L	**LS 404 TSA SW**
metal versions		
aluminium	P L	**AL 2404 TSA**
stainless steel	L	**ES 2404 TSA**
anthracite (aluminium lacquered)	L	**AL 2404 TSA AN**
classic brass	P	**ME 2404 TSA C**
antique brass		**ME 2404 TSA AT**
dark brass		**ME 2404 TSA D**

Covers with symbols for LS ranges and Flat Design

Cover 1-gang
with symbols ▲▼
to clip on push-button module 1-gang
ref.-no.: 4071 TSM, 4091 TSM, 4212 TSM,
push-button extension module, ref.-no.: 4091 TSEM and
push-button module, ref.-no.: 4008 TSM

breakproof version	
ivory	**LS 401 TSAP**
white	**LS 401 TSAP WW**
light grey	**LS 401 TSAP LG**
black	**LS 401 TSAP SW**
metal versions	
aluminium	**AL 2401 TSAP**
stainless steel	**ES 2401 TSAP**
anthracite (aluminium lacquered)	**AL 2401 TSAP AN**
classic brass	**ME 2401 TSAP C**
antique brass	**ME 2401 TSAP AT**
dark brass	**ME 2401 TSAP D**

Cover 2-gang
with symbols ▲▼
to exchange the covers of the cover kit 2-gang
ref.-no.: ..402 TSA..
and the right cover of the cover kit 3-gang ref.-no.: ..403 TSA..
in the LS design ranges

breakproof version	
ivory	**LS 402 TSAP**
white	**LS 402 TSAP WW**
light grey	**LS 402 TSAP LG**
black	**LS 402 TSAP SW**
metal versions	
aluminium	**AL 2402 TSAP**
stainless steel	**ES 2402 TSAP**
anthracite (aluminium lacquered)	**AL 2402 TSAP AN**
classic brass	**ME 2402 TSAP C**
antique brass	**ME 2402 TSAP AT**
dark brass	**ME 2402 TSAP D**

Ref.-no.

Covers with symbols for LS ranges and Flat Design

Cover 4-gang
with symbols ▲▼
to exchange the top left cover of the cover kit 3-gang
ref.-no.: ..403 TSA..
and top left and bottom right cover of the cover kit 4-gang
ref.-no.: ..404 TSA.. in the LS design ranges
to exchange the bottom right cover of the cover kit
ref.-no.: .. 4093 TSA .. in the LS design ranges
to exchange the bottom right cover of the cover kit
ref.-no.: RCD .. 4092 TSA .. in the LS design ranges

breakproof version	
ivory	**LS 404 TSAP 14**
white	**LS 404 TSAP WW 14**
light grey	**LS 404 TSAP LG 14**
black	**LS 404 TSAP SW 14**
metal versions	
aluminium	**AL 2404 TSAP 14**
stainless steel	**ES 2404 TSAP 14**
anthracite (aluminium lacquered)	**AL 2404 TSAP AN 14**
classic brass	**ME 2404 TSAP C 14**
antique brass	**ME 2404 TSAP AT 14**
dark brass	**ME 2404 TSAP D 14**

Cover 4-gang
with symbols ▲▼
to exchange the bottom left cover of the cover kit 3-gang
ref.-no.: ..403 TSA..
and top right and bottom left cover of the cover kit 4-gang
ref.-no.: ..404 TSA.. in the LS design ranges
to exchange the bottom left cover of the cover kit
ref.-no.: .. 4093 TSA .. in the LS design range
to exchange the bottom left cover of the cover kit
ref.-no.: RCD .. 4092 TSA .. in the LS design range

breakproof version	
ivory	**LS 404 TSAP 23**
white	**LS 404 TSAP WW 23**
light grey	**LS 404 TSAP LG 23**
black	**LS 404 TSAP SW 23**
metal versions	
aluminium	**AL 2404 TSAP 23**
stainless steel	**ES 2404 TSAP 23**
anthracite (aluminium lacquered)	**AL 2404 TSAP AN 23**
classic brass	**ME 2404 TSAP C 23**
antique brass	**ME 2404 TSAP AT 23**
dark brass	**ME 2404 TSAP D 23**

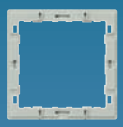

Adapter frame
(Spare part)
to combine push-button modules with LS ranges
and Flat Design
Also included in delivery of modules.
LS 4 AR

KNX – A ranges

Ref.-no.

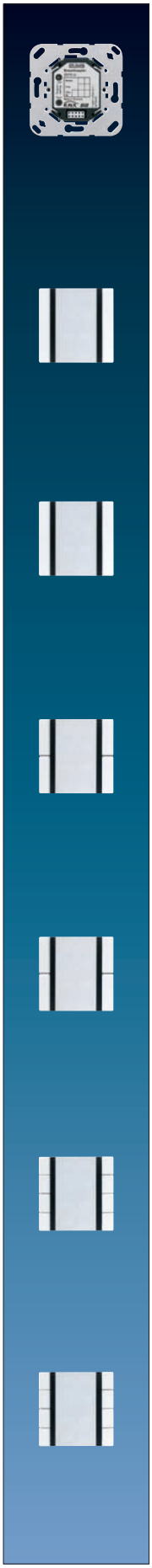

AS and A ranges

Bus coupling unit
screw fixing only, without claws
ETS product family: System components
Product type: Bus coupling unit
2070 U

Push-button sensor, 1-gang
ETS product family: Push-button
Product type: 1-gang push-button
Universal
for bus coupling unit ref.-no.: 2070 U

ivory	L	**A 2091 NABS**
white	L	**A 2091 NABS WW**
black	L	**A 2091 NABS SW**
aluminium	P L	**A 2091 NABS AL**
champagne	P	**A 2091 NABS CH**
mocha		**A 2091 NABS MO**

Standard
for bus coupling unit ref.-no.: 2070 U

ivory	L	**A 2071 NABS**
white	L	**A 2071 NABS WW**
black	L	**A 2071 NABS SW**
aluminium	P L	**A 2071 NABS AL**
champagne	P	**A 2071 NABS CH**
mocha		**A 2071 NABS MO**

Push-button sensor, 2-gang
ETS product family: Push-button
Product type: 2-gang push-button
Universal
for bus coupling unit ref.-no.: 2070 U

ivory	L	**A 2092 NABS**
white	L	**A 2092 NABS WW**
black	L	**A 2092 NABS SW**
aluminium	P L	**A 2092 NABS AL**
champagne	P	**A 2092 NABS CH**
mocha		**A 2092 NABS MO**

Standard
for bus coupling unit ref.-no.: 2070 U

ivory	L	**A 2072 NABS**
white	L	**A 2072 NABS WW**
black	L	**A 2072 NABS SW**
aluminium	P L	**A 2072 NABS AL**
champagne	P	**A 2072 NABS CH**
mocha		**A 2072 NABS MO**

Push-button sensor, 4-gang
ETS product family: Push-button
Product type: 4-gang push-button
Universal
for bus coupling unit ref.-no.: 2070 U

ivory	L	**A 2094 NABS**
white	L	**A 2094 NABS WW**
black	L	**A 2094 NABS SW**
aluminium	P L	**A 2094 NABS AL**
champagne	P	**A 2094 NABS CH**
mocha		**A 2094 NABS MO**

Standard
for bus coupling unit ref.-no.: 2070 U

ivory	L	**A 2074 NABS**
white	L	**A 2074 NABS WW**
black	L	**A 2074 NABS SW**
aluminium	P L	**A 2074 NABS AL**
champagne	P	**A 2074 NABS CH**
mocha		**A 2074 NABS MO**

Ref.-no.

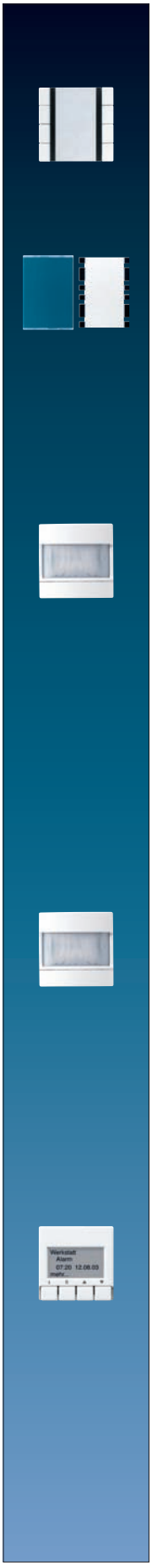

AS and A ranges

Light scene push-button sensor, 8-gang
for bus coupling unit ref.-no.: 2070 U
ETS product family: Push-button
Product type: General push-button

ivory	L	**A 2094 LZ**
white	L	**A 2094 LZ WW**
black	L	**A 2094 LZ SW**
aluminium	P L	**A 2094 LZ AL**

Transparent cover with paper inlay
for push-button sensors Ref.-no.: A 20..
(Spare part)

paper inlay ivory	**A 40 NA**
paper inlay white	**A 40 NA WW**
paper inlay aluminium	**A 40 NA AL**

PIR observer 180°, standard
for bus coupling unit ref.-no.: 2070 U
ETS product family: Physical sensors
Product type: Movement
for 1.1 m mounting height

ivory	**A 3180**
white	**A 3180 WW**
black	**A 3180 SW**
aluminium	**A 3180 AL**
champagne	**A 3180 CH**
mocha	**A 3180 MO**

for 2.2 m mounting height

ivory	**A 3280**
white	**A 3280 WW**
black	**A 3280 SW**
aluminium	**A 3280 AL**
champagne	**A 3280 CH**
mocha	**A 3280 MO**

PIR observer 180°, universal
for bus coupling unit ref.-no.: 2070 U
ETS product family: Physical sensors
Product type: Movement
for 1.1 m mounting height

ivory	**A 3180-1 A**
white	**A 3180-1 A WW**
black	**A 3180-1 A SW**
aluminium	**A 3180-1 A AL**
champagne	**A 3180-1 A CH**
mocha	**A 3180-1 A MO**

for 2.2 m mounting height

ivory	**A 3280-1 A**
white	**A 3280-1 A WW**
black	**A 3280-1 A SW**
aluminium	**A 3280-1 A AL**
champagne	**A 3280-1 A CH**
mocha	**A 3280-1 A MO**

LCD info display
for bus coupling unit ref.-no.: 2070 U
ETS product family: Display
Product type: Display

ivory	**A 2041**
white	**A 2041 WW**
black	**A 2041 SW**
aluminium	**A 2041 AL**
champagne	**A 2041 CH**
mocha	**A 2041 MO**

KNX – A ranges

Ref.-no.

AS and A ranges

Rotary sensor
with integrated BCU
with integrated push-button interface 3-gang
with push-button function and acoustic signal
Function: switching, dimming, shutter control, value transmitter, scene extension
DS 4092 TS

Centre plate with knob
for rotary sensor ref.-no.: DS 4092 TS

ivory	N	P	A 1540
white	N	P	A 1540 WW
black	N		A 1540 SW
aluminium	N	P L	A 1540 AL
champagne	N	P	A 1540 CH
mocha	N		A 1540 MO

Room temperature controller
with integrated BCU
with rotary knob for set point adjustment
Only with the ETS 3.0d version or later versions the full functionality will be available.

ivory	A 2178
white	A 2178 WW
black	A 2178 SW
aluminium	A 2178 AL
champagne	A 2178 CH
mocha	A 2178 MO

Room temperature controller
with integrated BCU
with integrated push-button interface 4-gang
with rotary knob for set point adjustment
Only with the ETS 3.0d version or later versions the full functionality will be available.

ivory	A 2178 TS
white	A 2178 TS WW
black	A 2178 TS SW
aluminium	A 2178 TS AL
champagne	A 2178 TS CH
mocha	A 2178 TS MO

Room autostat
with integrated BCU
with integrated push-button interface 4-gang
without rotary knob for set point adjustment
Only with the ETS 3.0d version or later versions the full functionality will be available.

ivory	A 2178 ORTS
white	A 2178 ORTS WW
black	A 2178 ORTS SW
aluminium	A 2178 ORTS AL
champagne	A 2178 ORTS CH
mocha	A 2178 ORTS MO

CO_2 multi-sensor
with integrated BCU
with humidity sensor and room temperature controller

ivory	CO2 A 2178
white	CO2 A 2178 WW
black	CO2 A 2178 SW
aluminium	CO2 A 2178 AL
champagne	CO2 A 2178 CH
mocha	CO2 A 2178 MO

Ref.-no.

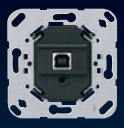

AS and A ranges

USB data interface
2130 USB

Centre plate
for USB data interface ref.-no.: 2130 USB

ivory	P	A 569 PLT
white	P	A 569 PLT WW
black		A 569 PLT SW
aluminium	P L	A 569 PLT AL
champagne	P	A 569 PLT CH
mocha		A 569 PLT MO

Push-button BCU, neutral position
Function: switching, dimming, shutter control
LED: always ON, always OFF, status indication
1-gang **4071.02 LED**
Status indication is possible with LED

Push-button BCU, switch position
Function: switching, dimming
LED: always ON, always OFF
Can be converted into pull cord push-button by means of pull cord insert ref.-no. 34 KO5 and rocker with lens.
1-gang **4071.01 LED**
Status indication is possible with LED

Rockers for AS range

1-gang rocker
for 1-gang push-button BCU
neutral position ref.-no.: 4071.02 LED
switch position ref.-no.: 4071.01 LED

ivory	P	AS 591
white	P	AS 591 WW

1-gang rocker with symbols
for 1-gang push-button BCU
neutral position ref.-no.: 4071.02 LED

ivory	AS 591 P
white	AS 591 P WW

1-gang rocker with lens
for 1-gang push-button BCU
neutral position ref.-no.: 4071.02 LED
switch position ref.-no.: 4071.01 LED

ivory	P	AS 591 KO5
white	P	AS 591 KO5 WW

1-gang rocker with lens and symbols
for 1-gang push-button BCU
neutral position ref.-no.: 4071.02 LED

ivory	AS 591 KO5P
white	AS 591 KO5P WW

Rockers for A ranges

1-gang rocker
for 1-gang push-button BCU
neutral position ref.-no.: 4071.02 LED
switch position ref.-no.: 4071.01 LED

white	P	A 590 WW
black		A 590 SW
aluminium	P L	A 590 AL

KNX – A ranges

Ref.-no.

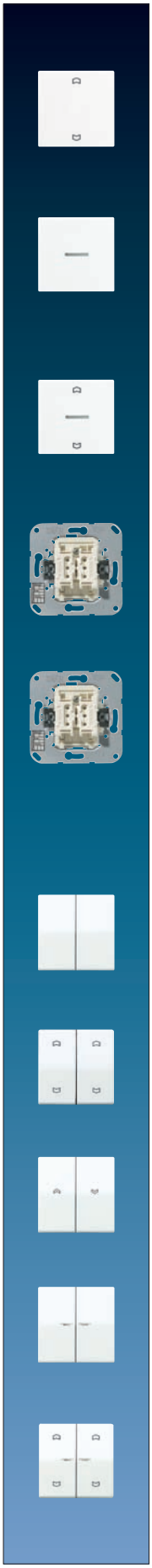

Rockers for A ranges

1-gang rocker with symbols
for 1-gang push-button BCU
neutral position ref.-no.: 4071.02 LED

white		**A 590 P WW**
black		**A 590 P SW**
aluminium		**A 590 P AL**

1-gang rocker with lens
for 1-gang push-button BCU
neutral position ref.-no.: 4071.02 LED
switch position ref.-no.: 4071.01 LED

white	P	**A 590 KO5 WW**
black		**A 590 KO5 SW**
aluminium	P L	**A 590 KO5 AL**

1-gang rocker with lens and symbols
for 1-gang push-button BCU
neutral position ref.-no.: 4071.02 LED

white		**A 590 KO5P WW**
black		**A 590 KO5P SW**
aluminium		**A 590 KO5P AL**

Push-button BCU, neutral position
Function: switching, dimming, shutter control
LED: always ON, always OFF, status indication
2-gang **4072.02 LED**
Status indication is possible with LED

Push-button BCU, switch position
Function: switching, dimming, shutter control
LED: always ON, always OFF
2-gang **4072.01 LED**
Status indication is possible with LED

Rockers for AS range

2-gang rocker
for 2-gang push-button BCU
neutral position ref.-no.: 4072.02 LED
switch position ref.-no.: 4072.01 LED

ivory	P	**AS 591-5**
white	P	**AS 591-5 WW**

2-gang rocker with symbols
for 2-gang push-button BCU
neutral position ref.-no.: 4072.02 LED

ivory	**AS 591-5 MP**
white	**AS 591-5 MP WW**

2-gang rocker with symbols
for 2-gang push-button BCU
switch position ref.-no.: 4072.01 LED

ivory	**AS 591-5 P**
white	**AS 591-5 P WW**

2-gang rocker with lens
for 2-gang push-button BCU
neutral position ref.-no.: 4072.02 LED
switch position ref.-no.: 4072.01 LED

ivory	P	**AS 591-5 KO5**
white	P	**AS 591-5 KO5 WW**

2-gang rocker with lens and symbols
for 2-gang push-button BCU
neutral position ref.-no.: 4072.02 LED

ivory	**AS 591-5 KO5MP**
white	**AS 591-5 KO5MP WW**

Ref.-no.

Rockers for AS range

2-gang rocker with lens and symbols
for 2-gang push-button BCU
switch position ref.-no.: 4072.01 LED

ivory	**AS 591-5 KO5P**
white	**AS 591-5 KO5P WW**

Rockers for A ranges

2-gang rocker
for 2-gang push-button BCU
neutral position ref.-no.: 4072.02 LED
switch position ref.-no.: 4072.01 LED

white	P	**A 595 WW**
black		**A 595 SW**
aluminium	P L	**A 595 AL**

2-gang rocker with symbols
for 2-gang push-button BCU
neutral position ref.-no.: 4072.02 LED

white	**A 595 MP WW**
black	**A 595 MP SW**
aluminium	**A 595 MP AL**

2-gang rocker with symbols
for 2-gang push-button BCU
switch position ref.-no.: 4072.01 LED

white	**A 595 P WW**
black	**A 595 P SW**
aluminium	**A 595 P AL**

2-gang rocker with lens
for 2-gang push-button BCU
neutral position ref.-no.: 4072.02 LED
switch position ref.-no.: 4072.01 LED

white	P	**A 595 KO5 WW**
black		**A 595 KO5 SW**
aluminium	P L	**A 595 KO5 AL**

2-gang rocker with lens and symbols
for 2-gang push-button BCU
neutral position ref.-no.: 4072.02 LED

white	**A 595 KO5MP WW**
black	**A 595 KO5MP SW**
aluminium	**A 595 KO5MP AL**

2-gang rocker with lens and symbols
for 2-gang push-button BCU
switch position ref.-no.: 4072.01 LED

white	**A 595 KO5P WW**
black	**A 595 KO5P SW**
aluminium	**A 595 KO5P AL**

KNX – A ranges

Ref.-no.

AS ranges

Frame
for horizontal and vertical installation
1-gang 80.5 x 80.5 x 10 mm
2-gang 80.5 x 151.5 x 10 mm
3-gang 80.5 x 222.5 x 10 mm
4-gang 80.5 x 293.5 x 10 mm
5-gang 80.5 x 364.5 x 10 mm

ivory

1-gang	**AS 581**
2-gang	**AS 582**
3-gang	**AS 583**
4-gang	**AS 584**
5-gang	**AS 585**

white

1-gang	**AS 581 WW**
2-gang	**AS 582 WW**
3-gang	**AS 583 WW**
4-gang	**AS 584 WW**
5-gang	**AS 585 WW**

Frame with inscription field 12 x 55.5 mm

ivory, 1-gang	**AS 581 NA**
white, 1-gang	**AS 581 NA WW**

Frame with inscription field 12 x 55.5 mm and 13 x 55.5 mm
for vertical installation
ivory

2-gang	**AS 582 NA**
3-gang	**AS 583 NA**
4-gang	**AS 584 NA**
5-gang	**AS 585 NA**

white

2-gang	**AS 582 NA WW**
3-gang	**AS 583 NA WW**
4-gang	**AS 584 NA WW**
5-gang	**AS 585 NA WW**

with inscription field 12 x 55.5 mm
for horizontal installation
ivory

2-gang	**AS 5820 NA**
3-gang	**AS 5830 NA**
4-gang	**AS 5840 NA**
5-gang	**AS 5850 NA**

white

2-gang	**AS 5820 NA WW**
3-gang	**AS 5830 NA WW**
4-gang	**AS 5840 NA WW**
5-gang	**AS 5850 NA WW**

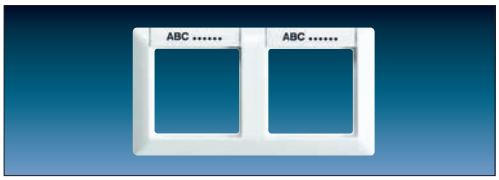

Ref.-no.

AS ranges

Surface cap
with integrated frame and non-flammable ground plate
1-gang, 85 x 85 x 47 mm

ivory	**AS 581 A W**
white	**AS 581 A WW**
black	**AS 581 A SW**
aluminium	**AS 581 A AL**
champagne	**AS 581 A CH**
mocha	**AS 581 A MO**

2-gang, 156 x 85 x 47 mm

ivory	**AS 582 A W**
white	**AS 582 A WW**
black	**AS 582 A SW**
aluminium	**AS 582 A AL**
champagne	**AS 582 A CH**
mocha	**AS 582 A MO**

3-gang, 227 x 85 x 47 mm

ivory	**AS 583 A W**
white	**AS 583 A WW**
black	**AS 583 A SW**
aluminium	**AS 583 A AL**
champagne	**AS 583 A CH**
mocha	**AS 583 A MO**

Mounting box for surface caps
(Spare part)

1-gang	**581 A**
2-gang	**582 A**
3-gang	**583 A**

Strain relief
for surface caps
for cables 3 x 1.5 mm² up to 5 x 2.5 mm² (Ø 7 up to 13 mm)
58 A ZUG

Inlets for cables, pipes and trunkings in surface caps

for cable and mini trunking
white **11 WW**

for trunking 15 x 15 mm
white **12 WW**

for pipes with outside Ø 16 mm
white **13 WW**

Surface cap
with inscription field 12 x 55.5 mm
with integrated frame, non-flammable ground plate and 2 cable inlets
1-gang, 85 x 85 x 47 mm
white **AS 581 ANA WW**

Cable inlet
for surface caps
ref.-no.: AS 581 ANA W, AS 581 ANA WW
(Spare part)
without press cut
white **15 WW**

Transparent cover with paper inlay
for inscription field 12 x 55.5 mm
(Spare part)
paper inlay white **AS 81 NA**

KNX – A ranges

Ref.-no.

A ranges

Frame
for horizontal and vertical installation
1-gang 81 x 81 x 10 mm
2-gang 81 x 152 x 10 mm
3-gang 81 x 223 x 10 mm
4-gang 81 x 294 x 10 mm
5-gang 81 x 365 x 10 mm

white		
1-gang	P	**A 581 WW**
2-gang	P	**A 582 WW**
3-gang	P	**A 583 WW**
4-gang	P	**A 584 WW**
5-gang	P	**A 585 WW**
black		
1-gang		**A 581 SW**
2-gang		**A 582 SW**
3-gang		**A 583 SW**
4-gang		**A 584 SW**
5-gang		**A 585 SW**
aluminium		
1-gang	P L	**A 581 AL**
2-gang	P L	**A 582 AL**
3-gang	P L	**A 583 AL**
4-gang	P L	**A 584 AL**
5-gang	P L	**A 585 AL**
champagne		
1-gang	P	**A 581 CH**
2-gang	P	**A 582 CH**
3-gang	P	**A 583 CH**
4-gang	P	**A 584 CH**
5-gang	P	**A 585 CH**
mocha		
1-gang		**A 581 MO**
2-gang		**A 582 MO**
3-gang		**A 583 MO**
4-gang		**A 584 MO**
5-gang		**A 585 MO**

Frame with inscription field 17 x 54 mm

white, 1-gang	**A 581 NA WW**
aluminium, 1-gang	**A 581 NA AL**

Frame with inscription field 17 x 54 mm and 13 x 54 mm
for vertical installation

white	
2-gang	**A 582 NA WW**
3-gang	**A 583 NA WW**
aluminium	
2-gang	**A 582 NA AL**
3-gang	**A 583 NA AL**
champagne	
2-gang	**A 582 NA CH**
3-gang	**A 583 NA CH**
mocha	
2-gang	**A 582 NA MO**
3-gang	**A 583 NA MO**

Frame with inscription field 17 x 54 mm for horizontal installation

white	
2-gang	**A 5820 NA WW**
3-gang	**A 5830 NA WW**
aluminium	
2-gang	**A 5820 NA AL**
3-gang	**A 5830 NA AL**
champagne	
2-gang	**A 5820 NA CH**
3-gang	**A 5830 NA CH**
mocha	
2-gang	**A 5820 NA MO**
3-gang	**A 5830 NA MO**

Ref.-no.

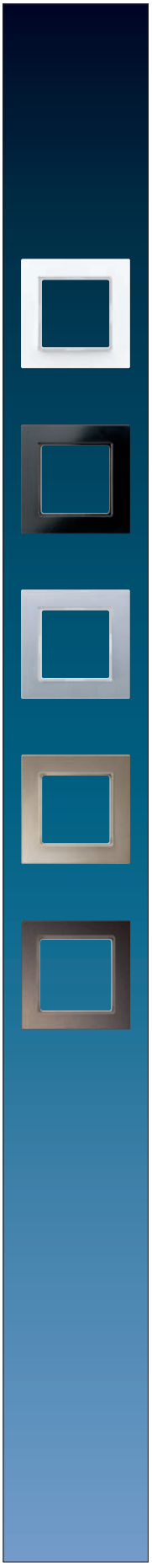

A creation

Frame
for horizontal and vertical installation
for A ranges
1-gang 84 x 84 x 10 mm
2-gang 84 x 155 x 10 mm
3-gang 84 x 226 x 10 mm
4-gang 84 x 297 x 10 mm
5-gang 84 x 368 x 10 mm

white		
1-gang	P	**AC 581 WW**
2-gang	P	**AC 582 WW**
3-gang	P	**AC 583 WW**
4-gang	P	**AC 584 WW**
5-gang	P	**AC 585 WW**
black		
1-gang		**AC 581 SW**
2-gang		**AC 582 SW**
3-gang		**AC 583 SW**
4-gang		**AC 584 SW**
5-gang		**AC 585 SW**
aluminium		
1-gang	P L	**AC 581 AL**
2-gang	P L	**AC 582 AL**
3-gang	P L	**AC 583 AL**
4-gang	P L	**AC 584 AL**
5-gang	P L	**AC 585 AL**
champagne		
1-gang	P	**AC 581 CH**
2-gang	P	**AC 582 CH**
3-gang	P	**AC 583 CH**
4-gang	P	**AC 584 CH**
5-gang	P	**AC 585 CH**
mocha		
1-gang		**AC 581 MO**
2-gang		**AC 582 MO**
3-gang		**AC 583 MO**
4-gang		**AC 584 MO**
5-gang		**AC 585 MO**

KNX – A ranges

Ref.-no.

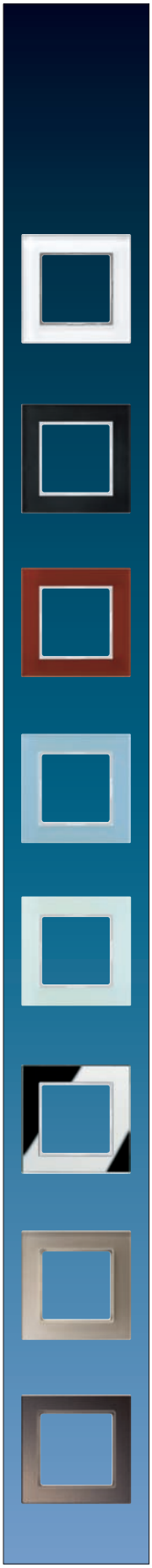

A creation

Glass frame
for horizontal and vertical installation
for A ranges
1-gang 84 x 84 x 10 mm
2-gang 84 x 155 x 10 mm
3-gang 84 x 226 x 10 mm
4-gang 84 x 297 x 10 mm
5-gang 84 x 368 x 10 mm

white

1-gang	**AC 581 GL WW**
2-gang	**AC 582 GL WW**
3-gang	**AC 583 GL WW**
4-gang	**AC 584 GL WW**
5-gang	**AC 585 GL WW**

black

1-gang	**AC 581 GL SW**
2-gang	**AC 582 GL SW**
3-gang	**AC 583 GL SW**
4-gang	**AC 584 GL SW**
5-gang	**AC 585 GL SW**

red

1-gang	**AC 581 GL RT**
2-gang	**AC 582 GL RT**
3-gang	**AC 583 GL RT**
4-gang	**AC 584 GL RT**
5-gang	**AC 585 GL RT**

blue-grey

1-gang	**AC 581 GL BLGR**
2-gang	**AC 582 GL BLGR**
3-gang	**AC 583 GL BLGR**
4-gang	**AC 584 GL BLGR**
5-gang	**AC 585 GL BLGR**

soft white

1-gang	**AC 581 GL WMT**
2-gang	**AC 582 GL WMT**
3-gang	**AC 583 GL WMT**
4-gang	**AC 584 GL WMT**
5-gang	**AC 585 GL WMT**

silver (mirror finish)

1-gang	**AC 581 GL SI**
2-gang	**AC 582 GL SI**
3-gang	**AC 583 GL SI**
4-gang	**AC 584 GL SI**
5-gang	**AC 585 GL SI**

champagne

1-gang	**AC 581 GL CH**
2-gang	**AC 582 GL CH**
3-gang	**AC 583 GL CH**
4-gang	**AC 584 GL CH**
5-gang	**AC 585 GL CH**

mocha

1-gang	**AC 581 GL MO**
2-gang	**AC 582 GL MO**
3-gang	**AC 583 GL MO**
4-gang	**AC 584 GL MO**
5-gang	**AC 585 GL MO**

KNX – A ranges

Ref.-no.

A plus

Frame
for horizontal and vertical installation
for A ranges
1-gang 93 x 89 x 11 mm
2-gang 93 x 160 x 11 mm
3-gang 93 x 231 x 11 mm
4-gang 93 x 302 x 11 mm
5-gang 93 x 373 x 11 mm

aluminium

1-gang	**AP 581 AL**
2-gang	**AP 582 AL**
3-gang	**AP 583 AL**
4-gang	**AP 584 AL**
5-gang	**AP 585 AL**

anthracite-aluminium

1-gang	**AP 581 ANT AL**
2-gang	**AP 582 ANT AL**
3-gang	**AP 583 ANT AL**
4-gang	**AP 584 ANT AL**
5-gang	**AP 585 ANT AL**

blue-aluminium

1-gang	**AP 581 BL AL**
2-gang	**AP 582 BL AL**
3-gang	**AP 583 BL AL**
4-gang	**AP 584 BL AL**
5-gang	**AP 585 BL AL**

aluminium-white

1-gang	**AP 581 AL WW**
2-gang	**AP 582 AL WW**
3-gang	**AP 583 AL WW**
4-gang	**AP 584 AL WW**
5-gang	**AP 585 AL WW**

anthracite-white

1-gang	**AP 581 ANT WW**
2-gang	**AP 582 ANT WW**
3-gang	**AP 583 ANT WW**
4-gang	**AP 584 ANT WW**
5-gang	**AP 585 ANT WW**

blue-white

1-gang	**AP 581 BL WW**
2-gang	**AP 582 BL WW**
3-gang	**AP 583 BL WW**
4-gang	**AP 584 BL WW**
5-gang	**AP 585 BL WW**

chrome-aluminium

1-gang	**AP 581 GCR AL**
2-gang	**AP 582 GCR AL**
3-gang	**AP 583 GCR AL**
4-gang	**AP 584 GCR AL**
5-gang	**AP 585 GCR AL**

chrome-white

1-gang	**AP 581 GCR WW**
2-gang	**AP 582 GCR WW**
3-gang	**AP 583 GCR WW**
4-gang	**AP 584 GCR WW**
5-gang	**AP 585 GCR WW**

KNX – CD ranges

Ref.-no.

CD ranges

Bus coupling unit
screw fixing only, without claws
ETS product family: System components
Product type: Bus coupling unit
2070 U

Push-button sensor, 1-gang
ETS product family: Push-button
Product type: 1-gang push-button
Universal
for bus coupling unit ref.-no.: 2070 U

ivory	**2091 NABS**
white	**CD 2091 NABS WW**
grey	**CD 2091 NABS GR**
light grey	**CD 2091 NABS LG**
black	**CD 2091 NABS SW**

Standard
for bus coupling unit ref.-no.: 2070 U

ivory	**2071 NABS**
white	**CD 2071 NABS WW**
grey	**CD 2071 NABS GR**
light grey	**CD 2071 NABS LG**
black	**CD 2071 NABS SW**

Push-button sensor, 2-gang
ETS product family: Push-button
Product type: 2-gang push-button
Universal
for bus coupling unit ref.-no.: 2070 U

ivory	**2092 NABS**
white	**CD 2092 NABS WW**
grey	**CD 2092 NABS GR**
light grey	**CD 2092 NABS LG**
black	**CD 2092 NABS SW**

Standard
for bus coupling unit ref.-no.: 2070 U

ivory	**2072 NABS**
white	**CD 2072 NABS WW**
grey	**CD 2072 NABS GR**
light grey	**CD 2072 NABS LG**
black	**CD 2072 NABS SW**

Push-button sensor, 4-gang
ETS product family: Push-button
Product type: 4-gang push-button
Universal
for bus coupling unit ref.-no.: 2070 U

ivory	**2094 NABS**
white	**CD 2094 NABS WW**
grey	**CD 2094 NABS GR**
light grey	**CD 2094 NABS LG**
black	**CD 2094 NABS SW**

Standard
for bus coupling unit ref.-no.: 2070 U

ivory	**2074 NABS**
white	**CD 2074 NABS WW**
grey	**CD 2074 NABS GR**
light grey	**CD 2074 NABS LG**
black	**CD 2074 NABS SW**

Universal radio KNX push-button, 4-gang
for bus coupling unit ref.-no.: 2070 U
ETS product family: Push-button
Product type: 4-gang push-button

ivory	**2094 F**
white	**CD 2094 F WW**
grey	**CD 2094 F GR**
light grey	**CD 2094 F LG**
black	**CD 2094 F SW**

Ref.-no.

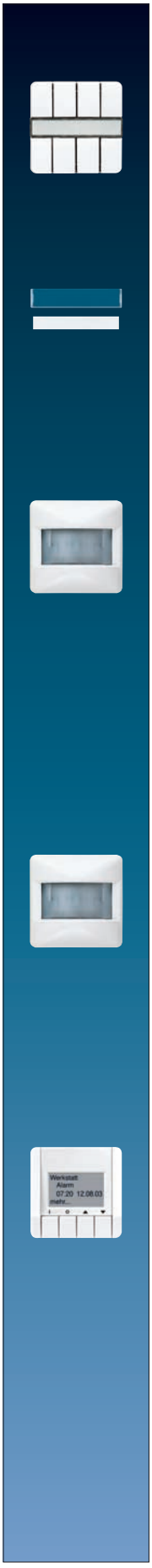

CD ranges

Light scene push-button sensor, 8-gang
for bus coupling unit ref.-no.: 2070 U
ETS product family: Push-button
Product type: General push-button

ivory	**2094 LZ**
white	**CD 2094 LZ WW**
grey	**CD 2094 LZ GR**
light grey	**CD 2094 LZ LG**
black	**CD 2094 LZ SW**

Transparent cover with paper inlay
for push-button sensors Ref.-no.: CD 20..
(Spare part)

paper inlay ivory	**CD 40 NA**
paper inlay white	**CD 40 NA WW**

PIR observer 180°, standard
for bus coupling unit ref.-no.: 2070 U
ETS product family: Physical sensors
Product type: Movement
sesitivity approx. 20 ... 100 %, adjustable with potentiometer
for 1.1 m mounting height

ivory	**3180**
white	**CD 3180 WW**
grey	**CD 3180 GR**
light grey	**CD 3180 LG**
black	**CD 3180 SW**

for 2.2 m mounting height

ivory	**3280**
white	**CD 3280 WW**
grey	**CD 3280 GR**
light grey	**CD 3280 LG**
black	**CD 3280 SW**

PIR observer 180°, universal
for bus coupling unit ref.-no.: 2070 U
ETS product family: Physical sensors
Product type: Movement
for 1.1 m mounting height

ivory	**3180-1 A**
white	**CD 3180-1 A WW**
grey	**CD 3180-1 A GR**
light grey	**CD 3180-1 A LG**
black	**CD 3180-1 A SW**

for 2.2 m mounting height

ivory	**3280-1 A**
white	**CD 3280-1 A WW**
grey	**CD 3280-1 A GR**
light grey	**CD 3280-1 A LG**
black	**CD 3280-1 A SW**

LCD info display
for bus coupling unit ref.-no.: 2070 U
ETS product family: Display
Product type: Display

ivory	**2041**
white	**CD 2041 WW**
grey	**CD 2041 GR**
light grey	**CD 2041 LG**
black	**CD 2041 SW**

KNX – CD ranges

Ref.-no.

CD ranges

Rotary sensor
with integrated BCU
with integrated push-button interface 3-gang
with push-button function and acoustic signal
Function: switching, dimming, shutter control, value transmitter, scene extension
DS 4092 TS

Centre plate with knob
for rotary sensor ref.-no.: DS 4092 TS

ivory	N	P	**CD 1540**
white	N	P	**CD 1540 WW**
grey	N		**CD 1540 GR**
light grey	N	P	**CD 1540 LG**
black	N		**CD 1540 SW**

Room temperature controller
with integrated BCU
with rotary knob for set point adjustment
Only with the ETS 3.0d version or later versions the full functionality will be available.

ivory	**2178**
white	**CD 2178 WW**
grey	**CD 2178 GR**
light grey	**CD 2178 LG**
black	**CD 2178 SW**

Room temperature controller
with integrated BCU
with integrated push-button interface 4-gang
with rotary knob for set point adjustment
Only with the ETS 3.0d version or later versions the full functionality will be available.

ivory	**2178 TS**
white	**CD 2178 TS WW**
grey	**CD 2178 TS GR**
light grey	**CD 2178 TS LG**
black	**CD 2178 TS SW**

Room autostat
with integrated BCU
with integrated push-button interface 4-gang
without rotary knob for set point adjustment
Only with the ETS 3.0d version or later versions the full functionality will be available.

ivory	**2178 ORTS**
white	**CD 2178 ORTS WW**
grey	**CD 2178 ORTS GR**
light grey	**CD 2178 ORTS LG**
black	**CD 2178 ORTS SW**

CO_2 multi-sensor
with integrated BCU
with humidity sensor and room temperature controller

ivory	**CO2 CD 2178**
white	**CO2 CD 2178 WW**
grey	**CO2 CD 2178 GR**
light grey	**CO2 CD 2178 LG**
black	**CO2 CD 2178 SW**

Ref.-no.

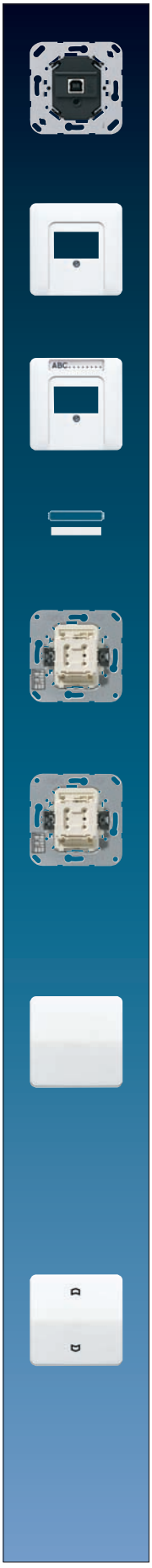

CD ranges

USB data interface
2130 USB

Centre plate
for USB data interface ref.-no.: 2130 USB
breakproof version

ivory	L	**569 T**
white	L	**CD 569 T WW**
grey	L	**CD 569 T GR**
light grey	L	**CD 569 T LG**
black	L	**CD 569 T SW**

Centre plate with inscription field 6 x 37 mm
for USB data interface ref.-no.: 2130 USB
breakproof version

ivory	L	**569 TNA**
white	L	**CD 569 TNA WW**

Transparent cover with paper inlay
for inscription field 6 x 37 mm
(Spare part)
paper inlay white **CD 20 NA**

Push-button BCU, neutral position
Function: switching, dimming, shutter control
LED: always ON, always OFF, status indication
1-gang **4071.02 LED**
Status indication is possible with LED

Push-button BCU, switch position
Function: switching, dimming
LED: always ON, always OFF
Can be converted into pull cord push-button by means of pull cord insert ref.-no. 34 KO5 and rocker with lens.
1-gang **4071.01 LED**
Status indication is possible with LED

1-gang rocker
for 1-gang push-button BCU
neutral position ref.-no.: 4071.02 LED
switch position ref.-no.: 4071.01 LED

ivory	P	**CD 590**
white	P	**CD 590 WW**
brown		**CD 590 BR**
grey		**CD 590 GR**
light grey	P	**CD 590 LG**
black		**CD 590 SW**
metal versions (anodized aluminium)		
gold-bronze	L	**CD 590 GB**
platinum	L	**CD 590 PT**

1-gang rocker with symbols
for 1-gang push-button BCU
neutral position ref.-no.: 4071.02 LED

ivory	**CD 590 P**
white	**CD 590 P WW**
brown	**CD 590 P BR**
grey	**CD 590 P GR**
light grey	**CD 590 P LG**
black	**CD 590 P SW**
metal versions (anodized aluminium)	
gold-bronze	**CD 590 P GB**
platinum	**CD 590 P PT**

KNX – CD ranges

Ref.-no.

CD ranges

1-gang rocker with inscription field 9 x 58 mm
for 1-gang push-button BCU
neutral position ref.-no.: 4071.02 LED
switch position ref.-no.: 4071.01 LED

ivory	P	**CD 590 NA**
white	P	**CD 590 NA WW**
brown		**CD 590 NA BR**
grey		**CD 590 NA GR**
light grey	P	**CD 590 NA LG**
black		**CD 590 NA SW**

Transparent cover with paper inlay
for inscription field 9 x 58 mm
(Spare part)
paper inlay white **CD 90 NA**

1-gang rocker with inscription field 7 x 57 mm
for 1-gang push-button BCU
neutral position ref.-no.: 4071.02 LED
switch position ref.-no.: 4071.01 LED
metal versions (anodized aluminium)

gold-bronze	L	**CD 590 NA GB**
platinum	L	**CD 590 NA PT**

Transparent cover with paper inlay
for inscription field 7 x 57 mm
(Spare part)
paper inlay white **LS 20 NA**

1-gang rocker with lens
for 1-gang push-button BCU
neutral position ref.-no.: 4071.02 LED
switch position ref.-no.: 4071.01 LED

ivory	P	**CD 590 KO5**
white	P	**CD 590 KO5 WW**
brown		**CD 590 KO5 BR**
grey		**CD 590 KO5 GR**
light grey	P	**CD 590 KO5 LG**
black		**CD 590 KO5 SW**

metal versions (anodized aluminium)

gold-bronze	L	**CD 590 KO5 GB**
platinum	L	**CD 590 KO5 PT**

1-gang rocker with lens and symbols
for 1-gang push-button BCU
neutral position ref.-no.: 4071.02 LED

ivory	**CD 590 KO5P**
white	**CD 590 KO5P WW**
brown	**CD 590 KO5P BR**
grey	**CD 590 KO5P GR**
light grey	**CD 590 KO5P LG**
black	**CD 590 KO5P SW**

metal versions (anodized aluminium)

gold-bronze	**CD 590 KO5P GB**
platinum	**CD 590 KO5P PT**

1-gang rocker with lens and inscription field 9 x 58 mm
for 1-gang push-button BCU
neutral position ref.-no.: 4071.02 LED
switch position ref.-no.: 4071.01 LED

ivory	P	**CD 590 NAKO5**
white	P	**CD 590 NAKO5 WW**
brown		**CD 590 NAKO5 BR**
grey		**CD 590 NAKO5 GR**
light grey	P	**CD 590 NAKO5 LG**
black		**CD 590 NAKO5 SW**

Transparent cover with paper inlay
for inscription field 9 x 58 mm
(Spare part)
paper inlay white **CD 90 NA**

Ref.-no.

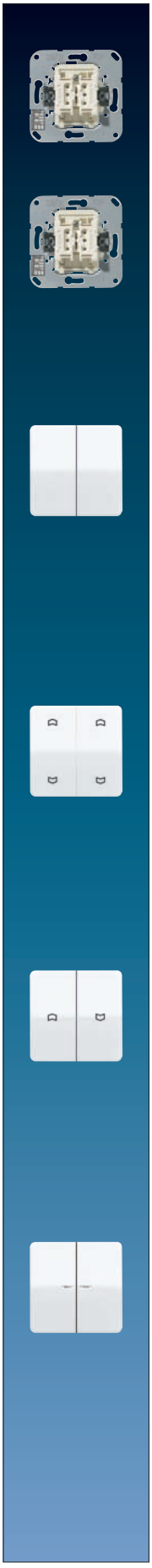

CD ranges

Push-button BCU, neutral position
Function: switching, dimming, shutter control
LED: always ON, always OFF, status indication
2-gang **4072.02 LED**
Status indication is possible with LED

Push-button BCU, switch position
Function: switching, dimming, shutter control
LED: always ON, always OFF
2-gang **4072.01 LED**
Status indication is possible with LED

2-gang rocker
for 2-gang push-button BCU
neutral position ref.-no.: 4072.02 LED
switch position ref.-no.: 4072.01 LED

ivory	P	**CD 595**
white	P	**CD 595 WW**
brown		**CD 595 BR**
grey		**CD 595 GR**
light grey	P	**CD 595 LG**
black		**CD 595 SW**

metal versions (anodized aluminium)

gold-bronze	L	**CD 595 GB**
platinum	L	**CD 595 PT**

2-gang rocker with symbols
for 2-gang push-button BCU
neutral position ref.-no.: 4072.02 LED

ivory	**CD 595 MP**
white	**CD 595 MP WW**
brown	**CD 595 MP BR**
grey	**CD 595 MP GR**
light grey	**CD 595 MP LG**
black	**CD 595 MP SW**

metal versions (anodized aluminium)

gold-bronze	**CD 595 MP GB**
platinum	**CD 595 MP PT**

2-gang rocker with symbols
for 2-gang push-button BCU
switch position ref.-no.: 4072.01 LED

ivory	**CD 595 P**
white	**CD 595 P WW**
brown	**CD 595 P BR**
grey	**CD 595 P GR**
light grey	**CD 595 P LG**
black	**CD 595 P SW**

metal versions (anodized aluminium)

gold-bronze	**CD 595 P GB**
platinum	**CD 595 P PT**

2-gang rocker with lens
for 2-gang push-button BCU
neutral position ref.-no.: 4072.02 LED
switch position ref.-no.: 4072.01 LED

ivory	P	**CD 595 KO5**
white	P	**CD 595 KO5 WW**
brown		**CD 595 KO5 BR**
grey		**CD 595 KO5 GR**
light grey	P	**CD 595 KO5 LG**
black		**CD 595 KO5 SW**

metal versions (anodized aluminium)

gold-bronze	L	**CD 595 KO5 GB**
platinum	L	**CD 595 KO5 PT**

KNX – CD ranges

	Ref.-no.

CD ranges

2-gang rocker with lens and symbols
for 2-gang push-button BCU
neutral position ref.-no.: 4072.02 LED

ivory	**CD 595 KO5MP**
white	**CD 595 KO5MP WW**
brown	**CD 595 KO5MP BR**
grey	**CD 595 KO5MP GR**
light grey	**CD 595 KO5MP LG**
black	**CD 595 KO5MP SW**
metal versions (anodized aluminium)	
gold-bronze	**CD 595 KO5MP GB**
platinum	**CD 595 KO5MP PT**

2-gang rocker with lens and symbols
for 2-gang push-button BCU
switch position ref.-no.: 4072.01 LED

ivory	**CD 595 KO5P**
white	**CD 595 KO5P WW**
brown	**CD 595 KO5P BR**
grey	**CD 595 KO5P GR**
light grey	**CD 595 KO5P LG**
black	**CD 595 KO5P SW**
metal versions (anodized aluminium)	
gold-bronze	**CD 595 KO5P GB**
platinum	**CD 595 KO5P PT**

Frame
for horizontal and vertical installation
1-gang 81 x 81 x 10 mm
2-gang 81 x 152 x 10 mm
3-gang 81 x 223 x 10 mm
4-gang 81 x 294 x 10 mm
5-gang 81 x 365 x 10 mm

ivory	
1-gang	**CD 581 W**
2-gang	**CD 582 W**
3-gang	**CD 583 W**
4-gang	**CD 584 W**
5-gang	**CD 585 W**
white	
1-gang	**CD 581 WW**
2-gang	**CD 582 WW**
3-gang	**CD 583 WW**
4-gang	**CD 584 WW**
5-gang	**CD 585 WW**
grey	
1-gang	**CD 581 GR**
2-gang	**CD 582 GR**
3-gang	**CD 583 GR**
4-gang	**CD 584 GR**
5-gang	**CD 585 GR**
light grey	
1-gang	**CD 581 LG**
2-gang	**CD 582 LG**
3-gang	**CD 583 LG**
4-gang	**CD 584 LG**
5-gang	**CD 585 LG**
black	
1-gang	**CD 581 SW**
2-gang	**CD 582 SW**
3-gang	**CD 583 SW**
4-gang	**CD 584 SW**
5-gang	**CD 585 SW**

	Ref.-no.

CD ranges

Frame for cable duct installation
for horizontal and vertical installation
1-gang 80 x 80 x 10 mm
2-gang 80 x 151 x 10 mm
3-gang 80 x 222 x 10 mm

breakproof version

ivory	
1-gang	**CD 581 K W**
2-gang	**CD 582 K W**
3-gang	**CD 583 K W**
white	
1-gang	**CD 581 K WW**
2-gang	**CD 582 K WW**
3-gang	**CD 583 K WW**
grey	
1-gang	**CD 581 K GR**
2-gang	**CD 582 K GR**
3-gang	**CD 583 K GR**
light grey	
1-gang	**CD 581 K LG**
2-gang	**CD 582 K LG**
3-gang	**CD 583 K LG**

Surface cap
with integrated frame and non-flammable ground plate

1-gang, 85 x 85 x 47 mm	
ivory	**CD 581 A W**
white	**CD 581 A WW**
brown	**CD 581 A BR**
grey	**CD 581 A GR**
2-gang, 156 x 85 x 47 mm	
ivory	**CD 582 A W**
white	**CD 582 A WW**
brown	**CD 582 A BR**
grey	**CD 582 A GR**
3-gang, 227 x 85 x 47 mm	
ivory	**CD 583 A W**
white	**CD 583 A WW**
brown	**CD 583 A BR**
grey	**CD 583 A GR**

Mounting box for surface caps
(Spare part)

1-gang	**581 A**
2-gang	**582 A**
3-gang	**583 A**

Strain relief
for surface caps
for cables 3 x 1.5 mm² up to 5 x 2.5 mm² (Ø 7 up to 13 mm)
58 A ZUG

Inlets for cables, pipes and trunkings in surface caps
for cable and mini trunking

ivory	**11**
white	**11 WW**
brown	**11 BR**
grey	**11 GR**
for trunking 15 x 15 mm	
ivory	**12**
white	**12 WW**
brown	**12 BR**
grey	**12 GR**
for pipes with outside Ø 16 mm	
ivory	**13**
white	**13 WW**
brown	**13 BR**
grey	**13 GR**

KNX – CD ranges

Ref.-no.

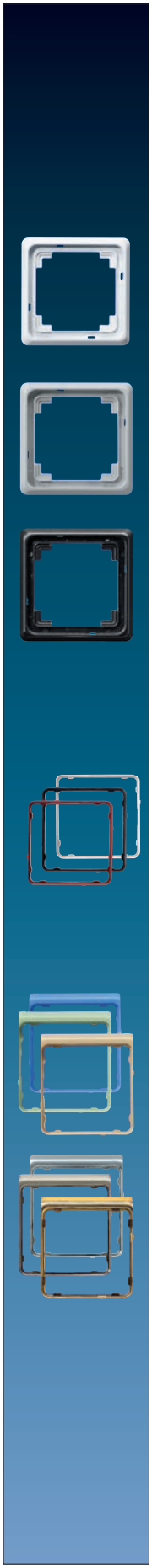

CD plus

Frame
for horizontal and vertical installation
for CD ranges
1-gang 84 x 84 x 9 mm
2-gang 84 x 155 x 9 mm
3-gang 84 x 226 x 9 mm
4-gang 84 x 297 x 9 mm
5-gang 84 x 368 x 9 mm

white

1-gang	**CDP 581 WW**
2-gang	**CDP 582 WW**
3-gang	**CDP 583 WW**
4-gang	**CDP 584 WW**
5-gang	**CDP 585 WW**

light grey

1-gang	**CDP 581 LG**
2-gang	**CDP 582 LG**
3-gang	**CDP 583 LG**
4-gang	**CDP 584 LG**
5-gang	**CDP 585 LG**

black

1-gang	**CDP 581 SW**
2-gang	**CDP 582 SW**
3-gang	**CDP 583 SW**
4-gang	**CDP 584 SW**
5-gang	**CDP 585 SW**

Internal colour frame
for installation in frames ref.-no. CDP 58..

light grey	**CDP 81 LG**
yellow	**CDP 81 GE**
mint green	**CDP 81 MINT**
light green	**CDP 81 LGN**
light blue	**CDP 81 LBL**
stainless steel	**CDP 81 ES**
granite	**CDP 81 GT**
metallic green	**CDP 81 GNM**
metallic black	**CDP 81 SWM**
metallic blue	**CDP 81 BLM**
metallic red	**CDP 81 RTM**
chrome	**CDP 81 GCR**
gold	**CDP 81 GGO**

External colour frame
for installation in frames ref.-no. CDP 58..

light grey	**CDP 82 LG**
yellow	**CDP 82 GE**
mint green	**CDP 82 MINT**
light green	**CDP 82 LGN**
light blue	**CDP 82 LBL**
stainless steel	**CDP 82 ES**
granite	**CDP 82 GT**
metallic green	**CDP 82 GNM**
metallic black	**CDP 82 SWM**
metallic blue	**CDP 82 BLM**
metallic red	**CDP 82 RTM**
chrome	**CDP 82 GCR**
gold	**CDP 82 GGO**

KNX – SL 500

Ref.-no.

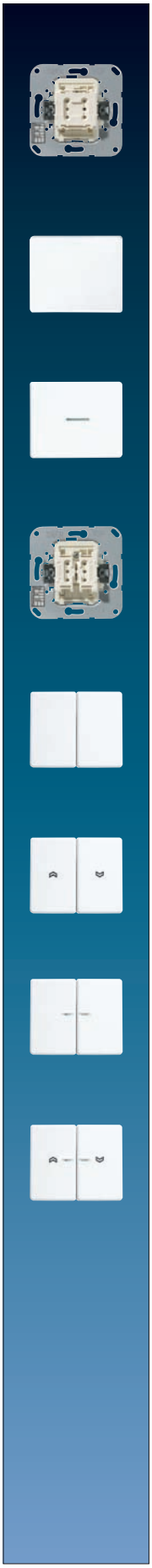

SL 500

Push-button BCU, switch position
Function: switching, dimming
LED: always ON, always OFF
Can be converted into pull cord push-button by means of pull cord insert ref.-no. 34 KO5 and rocker with lens.
1-gang **4071.01 LED**
Status indication is possible with LED

1-gang rocker
for 1-gang push-button BCU
switch position ref.-no.: 4071.01 LED

white	**SL 590 WW**
gold-bronze	**SL 590 GB**
black	**SL 590 SW**

1-gang rocker with lens
for 1-gang push-button BCU
switch position ref.-no.: 4071.01 LED

white	**SL 590 KO5 WW**
gold-bronze	**SL 590 KO5 GB**
black	**SL 590 KO5 SW**

Push-button BCU, switch position
Function: switching, dimming, shutter control
LED: always ON, always OFF
2-gang **4072.01 LED**
Status indication is possible with LED

2-gang rocker
for 2-gang push-button BCU
switch position ref.-no.: 4072.01 LED

white	**SL 595 WW**
gold-bronze	**SL 595 GB**
black	**SL 595 SW**

2-gang rocker with symbols
for 2-gang push-button BCU
switch position ref.-no.: 4072.01 LED

white	**SL 595 P WW**
gold-bronze	**SL 595 P GB**
black	**SL 595 P SW**

2-gang rocker with lens
for 2-gang push-button BCU
switch position ref.-no.: 4072.01 LED

white	**SL 595 KO5 WW**
gold-bronze	**SL 595 KO5 GB**
black	**SL 595 KO5 SW**

2-gang rocker with lens and symbols
for 2-gang push-button BCU
switch position ref.-no.: 4072.01 LED

white	**SL 595 KO5P WW**
gold-bronze	**SL 595 KO5P GB**
black	**SL 595 KO5P SW**

KNX – SL 500

	Ref.-no.

SL 500

Frame in acrylic glass, with coloured metal foil
1-gang 85 x 85 x 10 mm
2-gang 85 x 156 x 10 mm
3-gang 85 x 227 x 10 mm
4-gang 85 x 298 x 10 mm
5-gang 85 x 370 x 10 mm
for vertical installation

white	
1-gang	**SL 581 WW**
2-gang	**SL 582 WW**
3-gang	**SL 583 WW**
4-gang	**SL 584 WW**
5-gang	**SL 585 WW**
gold-bronze	
1-gang	**SL 581 GB**
2-gang	**SL 582 GB**
3-gang	**SL 583 GB**
4-gang	**SL 584 GB**
5-gang	**SL 585 GB**
silver	
1-gang	**SL 581 SI**
2-gang	**SL 582 SI**
3-gang	**SL 583 SI**
4-gang	**SL 584 SI**
5-gang	**SL 585 SI**

Frame in acrylic glass, with coloured metal foil
for horizontal installation

white	
2-gang	**SL 5820 WW**
3-gang	**SL 5830 WW**
4-gang	**SL 5840 WW**
5-gang	**SL 5850 WW**
gold-bronze	
2-gang	**SL 5820 GB**
3-gang	**SL 5830 GB**
4-gang	**SL 5840 GB**
5-gang	**SL 5850 GB**
silver	
2-gang	**SL 5820 SI**
3-gang	**SL 5830 SI**
4-gang	**SL 5840 SI**
5-gang	**SL 5850 SI**

KNX – LS ranges

	Ref.-no.

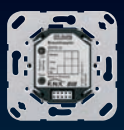

LS design ranges

Bus coupling unit
screw fixing only, without claws
ETS product family: System components
Product type: Bus coupling unit
2070 U

Push-button sensor, 1-gang
ETS product family: Push-button
Product type: 1-gang push-button
Universal
for bus coupling unit ref.-no.: 2070 U

ivory	L	**LS 2091 NABS**
white	L	**LS 2091 NABS WW**
light grey	L	**LS 2091 NABS LG**
black	L	**LS 2091 NABS SW**
metal versions		
aluminium (lacquered)	P	**AL 2091 NABS**
stainless steel	L	**ES 2091 NABS**
anthracite (lacquered)		**AL 2091 NABS AN**
chrome		**GCR 2091 NABS**
gold-coloured		**GO 2091 NABS**
Gold 24 carat		**LS 2091 NABS GGO**
classic brass	P	**ME 2091 NABS C**
antique brass		**ME 2091 NABS AT**
dark brass		**ME 2091 NABS D**

Standard
for bus coupling unit ref.-no.: 2070 U

ivory	L	**LS 2071 NABS**
white	L	**LS 2071 NABS WW**
light grey	L	**LS 2071 NABS LG**
black	L	**LS 2071 NABS SW**
metal versions		
aluminium (lacquered)	P	**AL 2071 NABS**
stainless steel	L	**ES 2071 NABS**
anthracite (lacquered)		**AL 2071 NABS AN**
chrome		**GCR 2071 NABS**
gold-coloured		**GO 2071 NABS**
classic brass	P	**ME 2071 NABS C**
antique brass		**ME 2071 NABS AT**
dark brass		**ME 2071 NABS D**

Push-button sensor, 2-gang
ETS product family: Push-button
Product type: 2-gang push-button
Universal
for bus coupling unit ref.-no.: 2070 U

ivory	L	**LS 2092 NABS**
white	L	**LS 2092 NABS WW**
light grey	L	**LS 2092 NABS LG**
black	L	**LS 2092 NABS SW**
metal versions		
aluminium (lacquered)	P	**AL 2092 NABS**
stainless steel	L	**ES 2092 NABS**
anthracite (lacquered)		**AL 2092 NABS AN**
chrome		**GCR 2092 NABS**
gold-coloured		**GO 2092 NABS**
Gold 24 carat		**LS 2092 NABS GGO**
classic brass	P	**ME 2092 NABS C**
antique brass		**ME 2092 NABS AT**
dark brass		**ME 2092 NABS D**

KNX – LS ranges

		Ref.-no.

LS design ranges

Standard
for bus coupling unit ref.-no.: 2070 U

ivory	L	**LS 2072 NABS**
white	L	**LS 2072 NABS WW**
light grey	L	**LS 2072 NABS LG**
black	L	**LS 2072 NABS SW**
metal versions		
aluminium (lacquered)	P	**AL 2072 NABS**
stainless steel	L	**ES 2072 NABS**
anthracite (lacquered)		**AL 2072 NABS AN**
chrome		**GCR 2072 NABS**
gold-coloured		**GO 2072 NABS**
classic brass	P	**ME 2072 NABS C**
antique brass		**ME 2072 NABS AT**
dark brass		**ME 2072 NABS D**

Push-button sensor, 4-gang
ETS product family: Push-button
Product type: 4-gang push-button
Universal
for bus coupling unit ref.-no.: 2070 U

ivory	L	**LS 2094 NABS**
white	L	**LS 2094 NABS WW**
light grey	L	**LS 2094 NABS LG**
black	L	**LS 2094 NABS SW**
metal versions		
aluminium (lacquered)	P	**AL 2094 NABS**
stainless steel	L	**ES 2094 NABS**
anthracite (lacquered)		**AL 2094 NABS AN**
chrome		**GCR 2094 NABS**
gold-coloured		**GO 2094 NABS**
Gold 24 carat		**LS 2094 NABS GGO**
classic brass	P	**ME 2094 NABS C**
antique brass		**ME 2094 NABS AT**
dark brass		**ME 2094 NABS D**

Standard
for bus coupling unit ref.-no.: 2070 U

ivory	L	**LS 2074 NABS**
white	L	**LS 2074 NABS WW**
light grey	L	**LS 2074 NABS LG**
black	L	**LS 2074 NABS SW**
metal versions		
aluminium (lacquered)	P	**AL 2074 NABS**
stainless steel	L	**ES 2074 NABS**
anthracite (lacquered)		**AL 2074 NABS AN**
chrome		**GCR 2074 NABS**
gold-coloured		**GO 2074 NABS**
classic brass	P	**ME 2074 NABS C**
antique brass		**ME 2074 NABS AT**
dark brass		**ME 2074 NABS D**

Universal radio KNX push-button, 4-gang
for bus coupling unit ref.-no.: 2070 U
ETS product family: Push-button
Product type: 4-gang push-button

ivory	L	**LS 2094 F**
white	L	**LS 2094 F WW**
light grey	L	**LS 2094 F LG**
black	L	**LS 2094 F SW**
metal versions		
aluminium (lacquered)	P	**AL 2094 F**
stainless steel	L	**ES 2094 F**
anthracite (lacquered)		**AL 2094 F AN**
gold-coloured		**GO 2094 F**

		Ref.-no.

LS design ranges

Light scene push-button sensor, 8-gang
for bus coupling unit ref.-no.: 2070 U
ETS product family: Push-button
Product type: General push-button

ivory	L	**LS 2094 LZ**
white	L	**LS 2094 LZ WW**
light grey	L	**LS 2094 LZ LG**
black	L	**LS 2094 LZ SW**
metal versions		
aluminium (lacquered)	P	**AL 2094 LZ**
stainless steel	L	**ES 2094 LZ**
anthracite (lacquered)		**AL 2094 LZ AN**
chrome		**GCR 2094 LZ**
gold-coloured		**GO 2094 LZ**

Transparent cover with paper inlay
for push-button sensors of the LS design ranges
(Spare part)

paper inlay ivory	**LS 40 NA**
paper inlay white	**LS 40 NA WW**
for devices in aluminium, anthracite and dark brass	
paper inlay aluminium	**AL 40 NA**
for devices in stainless steel, chrome, gold, classic and antique brass	
paper inlay stainless steel	**ES 40 NA**

PIR observer 180°, standard
for bus coupling unit ref.-no.: 2070 U
ETS product family: Physical sensors
Product type: Movement

for 1.1 m mounting height	
ivory	**LS 3180**
white	**LS 3180 WW**
light grey	**LS 3180 LG**
black	**LS 3180 SW**
metal versions	
aluminium (lacquered)	**AL 3180**
stainless steel (lacquered)	**ES 3180**
anthracite (lacquered)	**AL 3180 AN**
classic brass (lacquered)	**ME 3180 C**
antique brass (lacquered)	**ME 3180 AT**
dark brass (lacquered)	**ME 3180 D**
for 2.2 m mounting height	
ivory	**LS 3280**
white	**LS 3280 WW**
light grey	**LS 3280 LG**
black	**LS 3280 SW**
metal versions	
aluminium (lacquered)	**AL 3280**
stainless steel (lacquered)	**ES 3280**
anthracite (lacquered)	**AL 3280 AN**
classic brass (lacquered)	**ME 3280 C**
antique brass (lacquered)	**ME 3280 AT**
dark brass (lacquered)	**ME 3280 D**

KNX – LS ranges

	Ref.-no.

LS design ranges

PIR observer 180°, universal
for bus coupling unit ref.-no.: 2070 U
ETS product family: Physical sensors
Product type: Movement

for 1.1 m mounting height	
ivory	**LS 3180-1 A**
white	**LS 3180-1 A WW**
light grey	**LS 3180-1 A LG**
black	**LS 3180-1 A SW**
metal versions	
aluminium (lacquered)	**AL 3180-1 A**
stainless steel (lacquered)	**ES 3180-1 A**
anthracite (lacquered)	**AL 3180-1 A AN**
classic brass (lacquered)	**ME 3180-1 A C**
antique brass (lacquered)	**ME 3180-1 A AT**
dark brass (lacquered)	**ME 3180-1 A D**
for 2.2 m mounting height	
ivory	**LS 3280-1 A**
white	**LS 3280-1 A WW**
light grey	**LS 3280-1 A LG**
black	**LS 3280-1 A SW**
metal versions	
aluminium (lacquered)	**AL 3280-1 A**
stainless steel (lacquered)	**ES 3280-1 A**
anthracite (lacquered)	**AL 3280-1 A AN**
classic brass (lacquered)	**ME 3280-1 A C**
antique brass (lacquered)	**ME 3280-1 A AT**
dark brass (lacquered)	**ME 3280-1 A D**

LCD info display
for bus coupling unit ref.-no.: 2070 U
ETS product family: Display
Product type: Display

ivory	**LS 2041**
white	**LS 2041 WW**
light grey	**LS 2041 LG**
black	**LS 2041 SW**
metal versions	
aluminium (lacquered)	**AL 2041**
stainless steel (lacquered)	**ES 2041**
anthracite (lacquered)	**AL 2041 AN**
chrome	**GCR 2041**

Rotary sensor
with integrated BCU
with integrated push-button interface 3-gang
with push-button function and acoustic signal
Function: switching, dimming, shutter control, value transmitter, scene extension

DS 4092 TS

Centre plate with knob
for rotary sensor ref.-no.: DS 4092 TS

ivory	N	P	**LS 1940**
white	N	P	**LS 1940 WW**
light grey	N	P	**LS 1940 LG**
black	N		**LS 1940 SW**
metal versions			
aluminium	N	P L	**AL 1940**
stainless steel	N	L	**ES 1940**
anthracite (aluminium lacquered)	N	L	**AL 1940 AN**
chrome	N		**GCR 1940**
gold-coloured	N		**GO 1940**
Gold 24 carat	N		**LS 1940 GGO**
classic brass	N	P	**ME 1940 C**
antique brass	N		**ME 1940 AT**
dark brass	N		**ME 1940 D**

	Ref.-no.

LS design ranges

Room temperature controller
with integrated BCU

with rotary knob for set point adjustment
Only with the ETS 3.0d version or later versions the full functionality will be available.

ivory	**LS 2178**
white	**LS 2178 WW**
light grey	**LS 2178 LG**
black	**LS 2178 SW**
metal versions	
aluminium	**AL 2178**
stainless steel	**ES 2178**
anthracite (aluminium lacquered)	**AL 2178 AN**
chrome	**GCR 2178**
classic brass	**ME 2178 C**
antique brass	**ME 2178 AT**
dark brass	**ME 2178 D**

with integrated push-button interface 4-gang
with rotary knob for set point adjustment
Only with the ETS 3.0d version or later versions the full functionality will be available.

ivory	**LS 2178 TS**
white	**LS 2178 TS WW**
light grey	**LS 2178 TS LG**
black	**LS 2178 TS SW**
metal versions	
aluminium	**AL 2178 TS**
stainless steel	**ES 2178 TS**
anthracite (aluminium lacquered)	**AL 2178 TS AN**
chrome	**GCR 2178 TS**
classic brass	**ME 2178 TS C**
antique brass	**ME 2178 TS AT**
dark brass	**ME 2178 TS D**

with integrated push-button interface 4-gang
without rotary knob for set point adjustment
Only with the ETS 3.0d version or later versions the full functionality will be available.

ivory	**LS 2178 ORTS**
white	**LS 2178 ORTS WW**
light grey	**LS 2178 ORTS LG**
black	**LS 2178 ORTS SW**
metal versions	
aluminium	**AL 2178 ORTS**
stainless steel	**ES 2178 ORTS**
anthracite (aluminium lacquered)	**AL 2178 ORTS AN**
chrome	**GCR 2178 ORTS**
classic brass	**ME 2178 ORTS C**
antique brass	**ME 2178 ORTS AT**
dark brass	**ME 2178 ORTS D**

CO_2 multi-sensor
with integrated BCU
with humidity sensor and room temperature controller

ivory	**CO2 LS 2178**
white	**CO2 LS 2178 WW**
light grey	**CO2 LS 2178 LG**
black	**CO2 LS 2178 SW**
metal versions	
aluminium	**CO2 AL 2178**
stainless steel	**CO2 ES 2178**
anthracite (aluminium lacquered)	**CO2 AL 2178 AN**
chrome	**CO2 GCR 2178**
classic brass	**CO2 ME 2178 C**
antique brass	**CO2 ME 2178 AT**
dark brass	**CO2 ME 2178 D**

KNX – LS ranges

		Ref.-no.

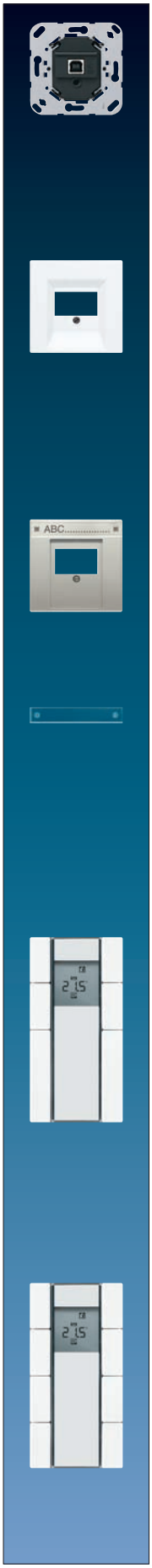

LS design ranges

USB data interface

		2130 USB

Centre plate
for USB data interface ref.-no.: 2130 USB
breakproof version

ivory	L	**LS 969 T**
white	L	**LS 969 T WW**
light grey	L	**LS 969 T LG**
black	L	**LS 969 T SW**
metal versions		
aluminium	P L	**AL 2969 T**
stainless steel	L	**ES 2969 T**
anthracite (aluminium lacquered)	L	**AL 2969 T AN**
chrome		**GCR 2969 T**
classic brass	P	**ME 2969 T C**
antique brass		**ME 2969 T AT**
dark brass		**ME 2969 T D**
with inscription field 12 x 55 mm		
metal versions		
aluminium	P L	**AL 2969 T NA**
stainless steel	L	**ES 2969 T NA**
anthracite (aluminium lacquered)	L	**AL 2969 T NA AN**
chrome		**GCR 2969 T NA**
classic brass	P	**ME 2969 T NA C**
antique brass		**ME 2969 T NA AT**
dark brass		**ME 2969 T NA D**

Transparent cover
for inscription field 12 x 55 mm
(Spare part)

		M 20 NA

Room controller (BCU integrated)
Display illuminated, either permanently
or when pressing any push-button.

Room controller display, 3-gang
ETS product family: Push-button
Product type: 3-gang push-button
1 green operation LED
6 red status LED

ivory		**RCD 2021**
white		**RCD 2021 WW**
light grey		**RCD 2021 LG**
black		**RCD 2021 SW**
metal versions		
aluminium (lacquered)	P	**RCD AL 2021**
stainless steel	L	**RCD ES 2021**
anthracite (lacquered)		**RCD AL 2021 AN**
classic brass	P	**RCD ME 2021 C**
antique brass		**RCD ME 2021 AT**
dark brass		**RCD ME 2021 D**

Room controller display, 4-gang
ETS product family: Push-button
Product type: 4-gang push-button
1 green operation LED
8 red status LED

ivory		**RCD 2022**
white		**RCD 2022 WW**
light grey		**RCD 2022 LG**
black		**RCD 2022 SW**
metal versions		
aluminium (lacquered)	P	**RCD AL 2022**
stainless steel	L	**RCD ES 2022**
anthracite (lacquered)		**RCD AL 2022 AN**
classic brass	P	**RCD ME 2022 C**
antique brass		**RCD ME 2022 AT**
dark brass		**RCD ME 2022 D**

		Ref.-no.

LS design ranges

Room controller display, 5-gang
ETS product family: Push-button
Product type: 5-gang push-button
1 green operation LED
10 red status LED

ivory		**RCD 2023**
white		**RCD 2023 WW**
light grey		**RCD 2023 LG**
black		**RCD 2023 SW**
metal versions		
aluminium (lacquered)	P	**RCD AL 2023**
stainless steel	L	**RCD ES 2023**
anthracite (lacquered)		**RCD AL 2023 AN**
classic brass	P	**RCD ME 2023 C**
antique brass		**RCD ME 2023 AT**
dark brass		**RCD ME 2023 D**

Room controller display, 6-gang
ETS product family: Push-button
Product type: 6-gang push-button
1 green operation LED
12 red status LED

ivory		**RCD 2024**
white		**RCD 2024 WW**
light grey		**RCD 2024 LG**
black		**RCD 2024 SW**
metal versions		
aluminium (lacquered)	P	**RCD AL 2024**
stainless steel	L	**RCD ES 2024**
anthracite (lacquered)		**RCD AL 2024 AN**
classic brass	P	**RCD ME 2024 C**
antique brass		**RCD ME 2024 AT**
dark brass		**RCD ME 2024 D**

Room controller display, 8-gang
ETS product family: Push-button
Product type: 8-gang push-button
1 green operation LED
16 red status LED

ivory		**RCD 2044**
white		**RCD 2044 WW**
light grey		**RCD 2044 LG**
black		**RCD 2044 SW**
metal versions		
aluminium (lacquered)	P	**RCD AL 2044**
stainless steel	L	**RCD ES 2044**
anthracite (lacquered)		**RCD AL 2044 AN**
classic brass	P	**RCD ME 2044 C**
antique brass		**RCD ME 2044 AT**
dark brass		**RCD ME 2044 D**

Transparent cover with paper inlay
for room controller displays "RCD" ref.-no.: RCD 20..,
RCD .. 20..
(Spare part)

paper inlay ivory	**RCD 20 NA**
paper inlay white	**RCD 20 NA WW**
paper inlay light grey	**RCD 20 NA LG**
for devices in black, aluminium, anthracite, and dark brass	
paper inlay aluminium	**RCD AL 20 NA**
for devices in stainless steel, classic and antique brass	
paper inlay stainless steel	**RCD ES 20 NA**

KNX – LS ranges

Ref.-no.

LS design ranges

Push-button BCU, neutral position
Function: switching, dimming, shutter control
LED: always ON, always OFF, status indication
1-gang **4071.02 LED**
Status indication is possible with LED

Push-button BCU, switch position
Function: switching, dimming
LED: always ON, always OFF
Can be converted into pull cord push-button by means of pull cord insert ref.-no. 34 KO5 and rocker with lens.
1-gang **4071.01 LED**
Status indication is possible with LED

1-gang rocker
for 1-gang push-button BCU
neutral position ref.-no.: 4071.02 LED
switch position ref.-no.: 4071.01 LED

ivory	P	**LS 990**
white	P	**LS 990 WW**
light grey	P	**LS 990 LG**
black		**LS 990 SW**
metal versions		
aluminium	P L	**AL 2990**
stainless steel	L	**ES 2990**
anthracite (aluminium lacquered)	L	**AL 2990 AN**

1-gang rocker with symbols
for 1-gang push-button BCU
neutral position ref.-no.: 4071.02 LED

ivory	**LS 990 P**
white	**LS 990 P WW**
light grey	**LS 990 P LG**
black	**LS 990 P SW**
metal versions	
aluminium	**AL 2990 P**
stainless steel	**ES 2990 P**
anthracite (aluminium lacquered)	**AL 2990 P AN**

1-gang rocker with inscription field 9 x 58 mm
for 1-gang push-button BCU
neutral position ref.-no.: 4071.02 LED
switch position ref.-no.: 4071.01 LED

ivory	P	**LS 990 NA**
white	P	**LS 990 NA WW**
light grey	P	**LS 990 NA LG**
black		**LS 990 NA SW**

Transparent cover with paper inlay
for inscription field 9 x 58 mm
(Spare part)
paper inlay white **CD 90 NA**

1-gang rocker with inscription field 12 x 55 mm
metal versions

aluminium	P L	**AL 2990 NA**
stainless steel	L	**ES 2990 NA**
anthracite (aluminium lacquered)	L	**AL 2990 NA AN**

Transparent cover
for inscription field 12 x 55 mm
(Spare part)
M 20 NA

Ref.-no.

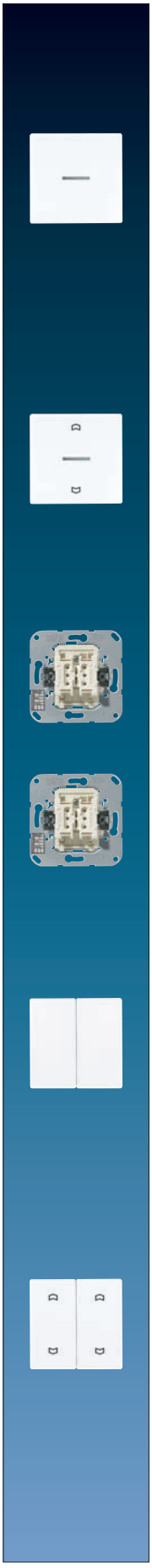

LS design ranges

1-gang rocker with lens
for 1-gang push-button BCU
neutral position ref.-no.: 4071.02 LED
switch position ref.-no.: 4071.01 LED

ivory	P	**LS 990 KO5**
white	P	**LS 990 KO5 WW**
light grey	P	**LS 990 KO5 LG**
black		**LS 990 KO5 SW**
metal versions		
aluminium	P L	**AL 2990 KO5**
stainless steel	L	**ES 2990 KO5**
anthracite (aluminium lacquered)	L	**AL 2990 KO5 AN**

1-gang rocker with lens and symbols
for 1-gang push-button BCU
neutral position ref.-no.: 4071.02 LED

ivory	**LS 990 KO5P**
white	**LS 990 KO5P WW**
light grey	**LS 990 KO5P LG**
black	**LS 990 KO5P SW**
metal versions	
aluminium	**AL 2990 KO5P**
stainless steel	**ES 2990 KO5P**
anthracite (aluminium lacquered)	**AL 2990 KO5P AN**

Push-button BCU, neutral position
Function: switching, dimming, shutter control
LED: always ON, always OFF, status indication
2-gang **4072.02 LED**
Status indication is possible with LED

Push-button BCU, switch position
Function: switching, dimming, shutter control
LED: always ON, always OFF
2-gang **4072.01 LED**
Status indication is possible with LED

2-gang rocker
for 2-gang push-button BCU
neutral position ref.-no.: 4072.02 LED
switch position ref.-no.: 4072.01 LED

ivory	P	**LS 995**
white	P	**LS 995 WW**
light grey	P	**LS 995 LG**
black		**LS 995 SW**
metal versions		
aluminium	P L	**AL 2995**
stainless steel	L	**ES 2995**
anthracite (aluminium lacquered)	L	**AL 2995 AN**

2-gang rocker with symbols
for 2-gang push-button BCU
neutral position ref.-no.: 4072.02 LED

ivory	**LS 995 MP**
white	**LS 995 MP WW**
light grey	**LS 995 MP LG**
black	**LS 995 MP SW**
metal versions	
aluminium	**AL 2995 MP**
stainless steel	**ES 2995 MP**
anthracite (aluminium lacquered)	**AL 2995 MP AN**

KNX – LS ranges

	Ref.-no.

LS design ranges

2-gang rocker with symbols
for 2-gang push-button BCU
switch position ref.-no.: 4072.01 LED

ivory	**LS 995 P**
white	**LS 995 P WW**
light grey	**LS 995 P LG**
black	**LS 995 P SW**
metal versions	
aluminium	**AL 2995 P**
stainless steel	**ES 2995 P**
anthracite (aluminium lacquered)	**AL 2995 P AN**

2-gang rocker with lens
for 2-gang push-button BCU
neutral position ref.-no.: 4072.02 LED
switch position ref.-no.: 4072.01 LED

ivory	P	**LS 995 KO5**
white	P	**LS 995 KO5 WW**
light grey	P	**LS 995 KO5 LG**
black		**LS 995 KO5 SW**
metal versions		
aluminium	P L	**AL 2995 KO5**
stainless steel	L	**ES 2995 KO5**
anthracite (aluminium lacquered)	L	**AL 2995 KO5 AN**

2-gang rocker with lens and symbols
for 2-gang push-button BCU
neutral position ref.-no.: 4072.02 LED

ivory	**LS 995 KO5MP**
white	**LS 995 KO5MP WW**
light grey	**LS 995 KO5MP LG**
black	**LS 995 KO5MP SW**
metal versions	
aluminium	**AL 2995 KO5MP**
stainless steel	**ES 2995 KO5MP**
anthracite (aluminium lacquered)	**AL 2995 KO5MP AN**

2-gang rocker with lens and symbols
for 2-gang push-button BCU
switch position ref.-no.: 4072.01 LED

ivory	**LS 995 KO5P**
white	**LS 995 KO5P WW**
light grey	**LS 995 KO5P LG**
black	**LS 995 KO5P SW**
metal versions	
aluminium	**AL 2995 KO5P**
stainless steel	**ES 2995 KO5P**
anthracite (aluminium lacquered)	**AL 2995 KO5P AN**

	Ref.-no.

LS design ranges

KNX FD room controller display (RCD)
ETS-product family: Heating, A/C, ventilation or push-button
Product type: Regulator or temperature

FD RCD 4-gang

ivory	**RCD 3094 M**
white	**RCD 3094 M WW**
light grey	**RCD 3094 M LG**
stainless steel	**RCD ES 3094 M**
aluminium	**RCD AL 3094 M**
anthracite	**RCD AL 3094 M AN**

FD RCD 6-gang

ivory	**RCD 3096 M**
white	**RCD 3096 M WW**
light grey	**RCD 3096 M LG**
stainless steel	**RCD ES 3096 M**
aluminium	**RCD AL 3096 M**
anthracite	**RCD AL 3096 M AN**

The FD room controller display is available in various colours or metal versions.
When you order a Flat Design RCD in the desired colour/metal version it will NOT be delivered with the required “cover for push-button modules”.
The covers have to be selected and ordered separately because there are different covers available (basic cover, with symbols or with inscription plate).

Cover for FD RCD

ivory	**FD 902 TSA**
white	**FD 902 TSA WW**
light grey	**FD 902 TSA LG**
Metal versions	
stainless steel	**FD ES 2902 TSA**
aluminium	**FD AL 2902 TSA**
anthracite	**FD AL 2902 TSA AN**

Cover for FD RCD
with symbols

ivory	**FD 902 TSAP**
white	**FD 902 TSAP WW**
light grey	**FD 902 TSAP LG**
Metal versions	
stainless steel	**FD ES 2902 TSAP**
aluminium	**FD AL 2902 TSAP**
anthracite	**FD AL 2902 TSAP AN**

Cover for FD RCD
with inscription plate 32 x 68.5 mm

ivory	**FD 902 TSANA**
white	**FD 902 TSANA WW**
light grey	**FD 902 TSANA LG**
Metal versions	
stainless steel	**FD ES 2902 TSANA**
aluminium	**FD AL 2902 TSANA**
anthracite	**FD AL 2902 TSANA AN**

KNX – LS ranges

	Ref.-no.

LS design ranges

Cover for FD RCD

ivory	**FD 904 TSA**
white	**FD 904 TSA WW**
light grey	**FD 904 TSA LG**
Metal versions	
stainless steel	**FD ES 2904 TSA**
aluminium	**FD AL 2904 TSA**
anthracite	**FD AL 2904 TSA AN**

Cover for FD RCD
with symbols

ivory	**FD 904 TSAP**
white	**FD 904 TSAP WW**
light grey	**FD 904 TSAP LG**
Metal versions	
stainless steel	**FD ES 2904 TSAP**
aluminium	**FD AL 2904 TSAP**
anthracite	**FD AL 2904 TSAP AN**

Cover for FD RCD
with inscription plate 32 x 33 mm

ivory	**FD 904 TSANA**
white	**FD 904 TSANA WW**
light grey	**FD 904 TSANA LG**
Metal versions	
stainless steel	**FD ES 2904 TSANA**
aluminium	**FD AL 2904 TSANA**
anthracite	**FD AL 2904 TSANA AN**

Frame
for horizontal and vertical installation

for the LS ranges and Flat Design

1-gang 81 x 81 x 11 mm
2-gang 81 x 152 x 11 mm
3-gang 81 x 223 x 11 mm
4-gang 81 x 294 x 11 mm
5-gang 81 x 365 x 11 mm

ivory

1-gang	**LS 981 W**
2-gang	**LS 982 W**
3-gang	**LS 983 W**
4-gang	**LS 984 W**
5-gang	**LS 985 W**

white

1-gang	**LS 981 WW**
2-gang	**LS 982 WW**
3-gang	**LS 983 WW**
4-gang	**LS 984 WW**
5-gang	**LS 985 WW**

light grey

1-gang	**LS 981 LG**
2-gang	**LS 982 LG**
3-gang	**LS 983 LG**
4-gang	**LS 984 LG**
5-gang	**LS 985 LG**

black

1-gang	**LS 981 SW**
2-gang	**LS 982 SW**
3-gang	**LS 983 SW**
4-gang	**LS 984 SW**
5-gang	**LS 985 SW**

KNX – LS ranges

	Ref.-no.

Frame
for horizontal and vertical installation

for the LS ranges and Flat Design

1-gang 81 x 81 x 11 mm
2-gang 81 x 152 x 11 mm
3-gang 81 x 223 x 11 mm
4-gang 81 x 294 x 11 mm
5-gang 81 x 365 x 11 mm

Metal versions
aluminium

1-gang	**AL 2981**
2-gang	**AL 2982**
3-gang	**AL 2983**
4-gang	**AL 2984**
5-gang	**AL 2985**

stainless steel

1-gang	**ES 2981**
2-gang	**ES 2982**
3-gang	**ES 2983**
4-gang	**ES 2984**
5-gang	**ES 2985**

anthracite (aluminium lacquered)

1-gang	**AL 2981 AN**
2-gang	**AL 2982 AN**
3-gang	**AL 2983 AN**
4-gang	**AL 2984 AN**
5-gang	**AL 2985 AN**

chrome

1-gang	**GCR 2981**
2-gang	**GCR 2982**
3-gang	**GCR 2983**
4-gang	**GCR 2984**
5-gang	**GCR 2985**

gold-coloured

1-gang	**GO 2981**
2-gang	**GO 2982**
3-gang	**GO 2983**
4-gang	**GO 2984**
5-gang	**GO 2985**

Gold 24 carat

1-gang	**LS 981 GGO**
2-gang	**LS 982 GGO**
3-gang	**LS 983 GGO**
4-gang	**LS 984 GGO**

classic brass

1-gang	**ME 2981 C**
2-gang	**ME 2982 C**
3-gang	**ME 2983 C**
4-gang	**ME 2984 C**
5-gang	**ME 2985 C**

antique brass

1-gang	**ME 2981 AT**
2-gang	**ME 2982 AT**
3-gang	**ME 2983 AT**
4-gang	**ME 2984 AT**
5-gang	**ME 2985 AT**

dark brass

1-gang	**ME 2981 D**
2-gang	**ME 2982 D**
3-gang	**ME 2983 D**
4-gang	**ME 2984 D**
5-gang	**ME 2985 D**

KNX – LS ranges

	Ref.-no.

LS design ranges

Surface cap
with integrated frame and non-flammable ground plate

1-gang, 81 x 81 x 47 mm	
ivory	**LS 581 A W**
white	**LS 581 A WW**
black	**LS 581 A SW**
metal versions	
aluminium (lacquered)	**AL 2581 A-L**
stainless steel (lacquered)	**ES 2581 A-L**
2-gang, 152 x 81 x 47 mm	
ivory	**LS 582 A W**
white	**LS 582 A WW**
black	**LS 582 A SW**
metal versions	
aluminium (lacquered)	**AL 2582 A-L**
stainless steel (lacquered)	**ES 2582 A-L**
3-gang, 223 x 81 x 47 mm	
ivory	**LS 583 A W**
white	**LS 583 A WW**
black	**LS 583 A SW**
metal versions	
aluminium (lacquered)	**AL 2583 A-L**
stainless steel (lacquered)	**ES 2583 A-L**

Mounting box for surface caps
(Spare part)

1-gang	**581 A**
2-gang	**582 A**
3-gang	**583 A**

Strain relief
for surface caps
for cables 3 x 1.5 mm² up to 5 x 2.5 mm² (Ø 7 up to 13 mm)
58 A ZUG

Inlets for cables, pipes and trunkings in surface caps

for cable and mini trunking	
ivory	**11**
white	**11 WW**
for trunking 15 x 15 mm	
ivory	**12**
white	**12 WW**
for pipes with outside Ø 16 mm	
ivory	**13**
white	**13 WW**

	Ref.-no.

Flat Design

Frame
for horizontal and vertical installation
for the LS ranges and Flat Design
1-gang 96 x 96 x 11 mm
2-gang 96 x 167 x 11 mm
3-gang 96 x 238 x 11 mm
4-gang 96 x 309 x 11 mm
5-gang 96 x 380 x 11 mm

ivory (duroplastic)		
1-gang	P	**LSD 981 W**
2-gang	P	**LSD 982 W**
3-gang	P	**LSD 983 W**
4-gang	P	**LSD 984 W**
5-gang	P	**LSD 985 W**
white (duroplastic)		
1-gang	P	**LSD 981 WW**
2-gang	P	**LSD 982 WW**
3-gang	P	**LSD 983 WW**
4-gang	P	**LSD 984 WW**
5-gang	P	**LSD 985 WW**
white (thermoplastic)		
1-gang	L	**LSD 981 BF WW**
2-gang	L	**LSD 982 BF WW**
3-gang	L	**LSD 983 BF WW**
light grey (duroplastic)		
1-gang	P	**LSD 981 LG**
2-gang	P	**LSD 982 LG**
3-gang	P	**LSD 983 LG**
4-gang	P	**LSD 984 LG**
5-gang	P	**LSD 985 LG**
black (duroplastic)		
1-gang		**LSD 981 SW**
2-gang		**LSD 982 SW**
3-gang		**LSD 983 SW**
4-gang		**LSD 984 SW**
5-gang		**LSD 985 SW**
aluminium		
1-gang	P L	**ALD 2981**
2-gang	P L	**ALD 2982**
3-gang	P L	**ALD 2983**
aluminium (lacquered)		
4-gang	P	**ALD 2984-L**
5-gang	P	**ALD 2985-L**
stainless steel		
1-gang	L	**ESD 2981**
2-gang	L	**ESD 2982**
3-gang	L	**ESD 2983**
stainless steel (lacquered)		
4-gang		**ESD 2984-L**
5-gang		**ESD 2985-L**
anthracite (aluminium lacquered)		
1-gang	L	**ALD 2981 AN**
2-gang	L	**ALD 2982 AN**
3-gang	L	**ALD 2983 AN**
chrome		
1-gang		**GCRD 2981**
2-gang		**GCRD 2982**
3-gang		**GCRD 2983**

KNX – LS ranges

Ref.-no.

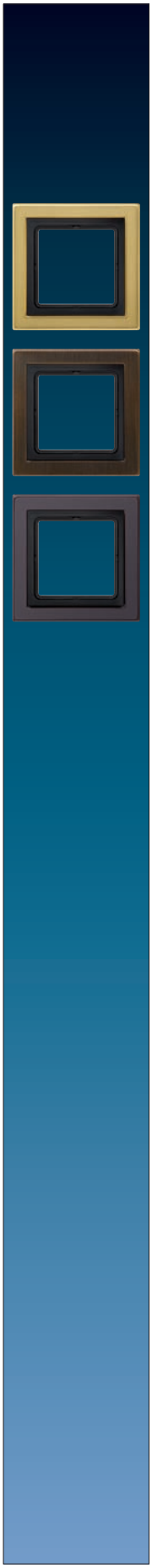

Flat Design

Frame
for horizontal and vertical installation
for the LS ranges and Flat Design
1-gang 96 x 96 x 11 mm
2-gang 96 x 167 x 11 mm
3-gang 96 x 238 x 11 mm
4-gang 96 x 309 x 11 mm
5-gang 96 x 380 x 11 mm

classic brass

1-gang	P	**MED 2981 C**
2-gang	P	**MED 2982 C**
3-gang	P	**MED 2983 C**

antique brass

1-gang	**MED 2981 AT**
2-gang	**MED 2982 AT**
3-gang	**MED 2983 AT**

dark brass

1-gang	**MED 2981 D**
2-gang	**MED 2982 D**
3-gang	**MED 2983 D**

Ref.-no.

FD-design

Frame
for horizontal and vertical installation
for the installation of SCHUKO® sockets and other devices of the LS design ranges (except switch/push-button inserts, center plates .. 1561/1565.07 .., push-button sensors, devices with LED floor pilot light) into the frames FD.. 981.. – FD.. 983..
1-gang 96 x 96 x 6.3 mm
2-gang 96 x 167 x 6.3 mm
3-gang 96 x 238 x 6.3 mm

ivory

1-gang	L	**FD 981 W**
2-gang	L	**FD 982 W**
3-gang	L	**FD 983 W**

white

1-gang	L	**FD 981 WW**
2-gang	L	**FD 982 WW**
3-gang	L	**FD 983 WW**

light grey

1-gang	L	**FD 981 LG**
2-gang	L	**FD 982 LG**
3-gang	L	**FD 983 LG**

black

1-gang	L	**FD 981 SW**
2-gang	L	**FD 982 SW**
3-gang	L	**FD 983 SW**

Metal versions

aluminium

1-gang	P	L	**FDAL 2981**
2-gang	P	L	**FDAL 2982**
3-gang	P	L	**FDAL 2983**

stainless steel

1-gang	L	**FDES 2981**
2-gang	L	**FDES 2982**
3-gang	L	**FDES 2983**

anthracite (aluminium lacquered)

1-gang	L	**FDAL 2981 AN**
2-gang	L	**FDAL 2982 AN**
3-gang	L	**FDAL 2983 AN**

classic brass

1-gang	P	**FDME 2981 C**
2-gang	P	**FDME 2982 C**
3-gang	P	**FDME 2983 C**

antique brass

1-gang	**FDME 2981 AT**
2-gang	**FDME 2982 AT**
3-gang	**FDME 2983 AT**

dark brass

1-gang	**FDME 2981 D**
2-gang	**FDME 2982 D**
3-gang	**FDME 2983 D**

Intermediate frame
for the installation of SCHUKO® sockets and other devices of the LS design ranges (except switch/push-button inserts, center plates .. 1561/1565.07 .., push-button sensors, devices with LED floor pilot light) into the frames FD.. 981.. – FD.. 983..
FD 981 Z

KNX – LS ranges

	Ref.-no.

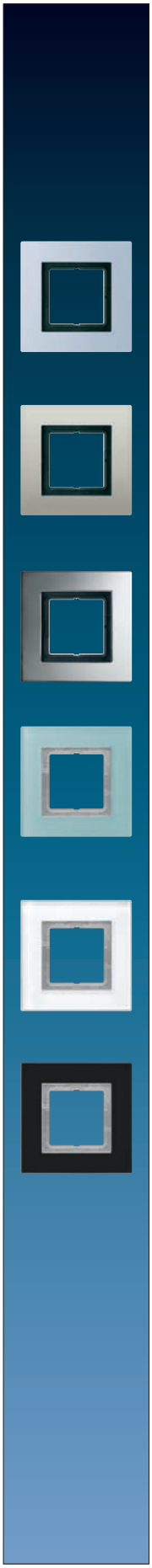

LS plús

Frame
for horizontal and vertical installation
for the LS ranges and Flat Design
1-gang 115 x 115 x 11 mm
2-gang 115 x 186 x 11 mm
3-gang 115 x 257 x 11 mm
4-gang 115 x 328 x 11 mm
5-gang 115 x 399 x 11 mm

aluminium

1-gang	P L **LSP 981 AL**
2-gang	P L **LSP 982 AL**
3-gang	P L **LSP 983 AL**
4-gang	P L **LSP 984 AL**
5-gang	P L **LSP 985 AL**

stainless steel

1-gang	L **LSP 981 ES**
2-gang	L **LSP 982 ES**
3-gang	L **LSP 983 ES**
4-gang	L **LSP 984 ES**
5-gang	L **LSP 985 ES**

chrome

1-gang	**LSP 981 GCR**
2-gang	**LSP 982 GCR**
3-gang	**LSP 983 GCR**
4-gang	**LSP 984 GCR**
5-gang	**LSP 985 GCR**

Glass frame
soft white

1-gang	**LSP 981 GLAS**
2-gang	**LSP 982 GLAS**
3-gang	**LSP 983 GLAS**
4-gang	**LSP 984 GLAS**
5-gang	**LSP 985 GLAS**

white

1-gang	**LSP 981 GL WW**
2-gang	**LSP 982 GL WW**
3-gang	**LSP 983 GL WW**
4-gang	**LSP 984 GL WW**
5-gang	**LSP 985 GL WW**

black

1-gang	**LSP 981 GL SW**
2-gang	**LSP 982 GL SW**
3-gang	**LSP 983 GL SW**
4-gang	**LSP 984 GL SW**
5-gang	**LSP 985 GL SW**

KNX – WG 800 surface range

	Ref.-no.

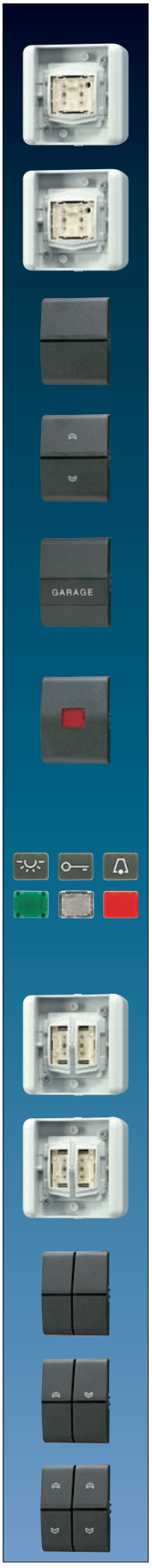

WG 800

Push-button BCU, neutral position
Function: switching, dimming, shutter control
LED: always ON, always OFF, status indication
1-gang **8471.02 LED W**
Status indication is possible with LED

Push-button BCU, switch position
Function: switching, dimming
LED: always ON, always OFF
1-gang **8471.01 LED W**
Status indication is possible with LED

1-gang rocker with lens
for 1-gang push-button BCU
neutral position ref.-no.: 8471.02 LED W
switch position ref.-no.: 8471.01 LED W
800 NT

1-gang rocker with lens and symbols
for 1-gang push-button BCU
neutral position ref.-no.: 8471.02 LED W
800 P

Rocker with inscription field
for 1-gang push-button BCU
neutral position ref.-no.: 8471.02 LED W
switch position ref.-no.: 8471.01 LED W
with inscription field
22 x 48 mm **800 NA**

1-gang rocker with great lens
for 1-gang push-button BCU
neutral position ref.-no.: 8471.02 LED W
switch position ref.-no.: 8471.01 LED W
with red symbol **800 KO**

Symbols
for switches and push-buttons with indicator light

anthracite, symbol light	**33 AN L**
anthracite, symbol bell	**33 AN K**
anthracite, symbol door	**33 AN T**
anthracite, neutral	**33 AN N**
green, neutral	**33 GN**
transparent, neutral	**33 KLAR**
red, neutral	**33 NR**

Push-button BCU, neutral position
Function: switching, dimming, shutter control
LED: always ON, always OFF, status indication
2-gang **8472.02 LED W**
Status indication is possible with LED

Push-button BCU, switch position
Function: switching, dimming, shutter control
LED: always ON, always OFF
2-gang **8472.01 LED W**
Status indication is possible with LED

2-gang rocker with lens
for 2-gang push-button BCU
neutral position ref.-no.: 8472.02 LED W
switch position ref.-no.: 8472.01 LED W
805 NT

2-gang rocker with lens and symbols
for 2-gang push-button BCU
switch position ref.-no.: 8472.01 LED W
805 P

2-gang rocker with lens and symbols
for 2-gang push-button BCU
neutral position ref.-no.: 8472.02 LED W
805 MP

KNX – Detectors / System devices

Ref.-no.

Presence detector
with integrated BCU
ETS product family: Physical sensors
Product type: Movement
Standard version
white N **3361 WW**
aluminium
(lacquered) N **3361 AL**
Universal
white N **3361-1 WW**
aluminium
(lacquered) N **3361-1 AL**

IR Remote control
for KNX presence detector Universal ref.-no.: 3361-1 ..
N **KNX PM FB IR**

Protection cage
for KNX presence detector ref.-no.: 3361..
white N **SK 180-90 WW**

Surface-mounted housing
for ceiling installation (surface-mounted) of
KNX presence detectors
ref. no.: 3361 WW, 3361 AL, 3361-1 WW, 3361-1 AL
white N **PM-KAPPE-1**
aluminium (lacquered) N **PM-KAPPE AL-1**
Dimensions: diameter 103 mm, height: 19 mm

Flush-mounted brightness controller
with integrated BCU
2095 LUX

Power supply, 640 mA
2 outputs BUS
1 output 30 V DC (additional choke is required)
Rail mounting device, 7 rail units
ETS product family: System components
Product type: Power supply
2002 REG

Power supply, 320 mA
1 output BUS
1 output 30 V DC (additional choke is required)
Rail mounting device, 4 rail units
ETS product family: System components
Product type: Power supply
2005 REG

Uninterruptible KNX power supply 640 mA
with integrated choke
Rail mounting device, 8 rail units
ETS product family: System components
Product type: Power supply
USV 640 MA

Lead gel battery (rechargeable)
BGA 12 AH
12 V DC, 12 Ah

Cable set
Basis **KSB 4**
Extension **KSE 2**

KNX – System devices / Actuators

Ref.-no.

USB data interface
Rail mounting device, 2 rail units
2130 USB REG

IP interface
Rail mounting device, 3 rail units
N **IPS 200 REG**
Supply from network line (Power-over-Ethernet acc. to IEEE 802.3af) through separate voltage supply ref.-no. NT 2415 REG VDC or the auxiliary voltage output of the KNX voltage supply

IP router
Rail mounting device, 3 rail units
ETS product family: System components
Product type: IP router
N **IPR 200 REG**
Supply from network line (Power-over-Ethernet acc. to IEEE 802.3af) through separate voltage supply ref.-no. NT 2415 REG VDC or the auxiliary voltage output of the KNX voltage supply

Power supply for rail mounting
for IP interface ref.-no.: IPS 200 REG
and IP router ref.-no.: IPR 200 REG
Rail mounting device, 4 rail units
NT 2415 REG VDC

Line coupler
Rail mounting device, 2 rail units
ETS product family: System components
Product type: Line coupler
2142 REG

Application unit logic
Rail mounting device, 2 rail units
ETS product family: Controller
Product type: Controller
ABL/S2.1

Switch actuator, 6-gang
Rail mounting device, 4 rail units
6 make contacts
ETS product family: Output
Product type: Binary output
2136.6 REG

Switch actuator, 2-gang
Rail mounting device, 4 rail units
2 make contacts with manual mechanical operation and status indicator
ETS product family: Output
Product type: Binary output
2302.16 REGHM

Switch actuator, 4-gang
Rail mounting device, 4 rail units
4 make contacts with manual mechanical operation and status indicator
ETS product family: Output
Product type: Binary output
2304.16 REGHM

KNX – Actuators

Ref.-no.

Switch actuator with C-load, 4-gang
with current detection
Rail mounting device, 4 rail units
4 make contacts with manual mechanical operation
and status indicator
Only with the ETS 3.0d version or later versions
the full functionality will be available.
ETS product family: Output
Product type: Binary output
2304.16 REGCHM

Switch actuator, 8-gang
Rail mounting device, 8 rail units
8 make contacts with manual mechanical operation
and status indicator
Only with the ETS 3.0d version or later versions
the full functionality will be available.
ETS product family: Output
Product type: Binary output
2308.16 REGHM

Switch actuator with C-load, 8-gang
with current detection
Rail mounting device, 8 rail units
8 make contacts with manual mechanical operation
and status indicator
Only with the ETS 3.0d version or later versions
the full functionality will be available.
ETS product family: Output
Product type: Binary output
2308.16 REGCHM

Heating actuator, 6-gang
Rail mounting device, 4 rail units
6 outputs "TRIAC"
ETS product family: Heating, A/C, Ventilation
Product type: Valve
2136 REG HZ

Fan coil actuator 2-gang
Rail mounting device, 4 rail units
with manual electronic operation and LED status indication
Only with the ETS 3.0d version or later versions
the full functionality will be available.
ETS product family: Heating, A/C, Ventilation
Product type: Fan-coil
FCA 2 REGHE

Room actuator 230 V
Rail mounting device, 4 rail units
with manual electronic operation and LED status indication
Only with the ETS 3.0d version or later versions
the full functionality will be available.
ETS product family: Output
Product type: Binary output
RA 23024 REGHE

Switch / blinds actuator, 4/2-gang
Rail mounting device, 4 rail units
Switch actuator: max. 4-gang
Blind actuator: max. 2-gang
Max. 2-gang switch actuator/1-gang blind actuator
in combination
with manual electronic operation and LED status indication
Only with the ETS 3.0d version or later versions
the full functionality will be available.
ETS product family: Output
Product type: Binary output
2304.16 REGHE

Ref.-no.

Switch / blinds actuator, 8/4-gang
Rail mounting device, 4 rail units
Switch actuator: max. 8-gang
Blind actuator: max. 4-gang
Max. 4-gang switch actuator/2-gang blind actuator
in combination
with manual electronic operation and LED status indication
Only with the ETS 3.0d version or later versions
the full functionality will be available.
ETS product family: Output
Product type: Binary output
2308.16 REGHE

Switch / blinds actuator, 16/8-gang
Rail mounting device, 8 rail units
Switch actuator: max. 16-gang
Blind actuator: max. 8-gang
Max. 6-gang switch actuator/5-gang blind actuator
in combination
with manual electronic operation and LED status indication
Only with the ETS 3.0d version or later versions
the full functionality will be available.
ETS product family: Output
Product type: Binary output
2316.16 REGHE

Analogue actuator, 4-gang
Rail mounting device, 4 rail units
ETS product family: Output
Product type: Analogue output 4-gang
2204.01 REGA
The analogue output needs 24 V AC for operation.
The necessary power can be supplied by the power
supply unit ref.-no.: WSSV 10.

Analogue actuator module, 4-gang
Rail mounting device, 4 rail units
2204.01 REGAM
Extension module for analogue actuator 4-gang
ref.-no.: 2204.01 REGA

Blinds actuator, 4-gang DC 12-48 V
Rail mounting device, 4 rail units
with manual electronic operation and LED status indication
Only with the ETS 3.0d version or later versions
the full functionality will be available.
ETS product family: Shutter
Product type: Shutter
2424 REGHE

Blinds actuator, 2-gang AC 230 V, 1-gang DC 12-48 V
Rail mounting device, 4 rail units
with manual electronic operation and LED status indication
Only with the ETS 3.0d version or later versions
the full functionality will be available.
ETS product family: Shutter
Product type: Shutter
2502 REGHE

Blinds actuator, 4-gang AC 230 V, 2-gang DC 12-48 V
Rail mounting device, 4 rail units
with manual electronic operation and LED status indication
Only with the ETS 3.0d version or later versions
the full functionality will be available.
ETS product family: Shutter
Product type: Shutter
2504 REGHE

KNX – Actuators

Ref.-no.

Blinds actuator, 4-gang AC 230 V, 2-gang DC 12-48 V
Rail mounting device, 4 rail units
with manual electronic operation and LED status indication
mit Endlagenkorrektur unten
Only with the ETS 3.0d version or later versions
the full functionality will be available.
ETS product family: Shutter
Product type: Shutter
2514 REGHE

Blinds actuator, 8-gang AC 230 V, 4-gang DC 12-48 V
Rail mounting device, 8 rail units
with manual electronic operation and LED status indication
Only with the ETS 3.0d version or later versions
the full functionality will be available.
ETS product family: Shutter
Product type: Shutter
2508 REGHE

Shutter actuator 4-gang AC 230 V
Rail mounting device, 4 rail units
with manual electronic operation and LED status indication
ETS product family: Shutter
Product type: Shutter
2504 REGHER

Universal dimming actuator / speed regulator, 1-gang
1 x 500 W, HV LED lamps typ. 7 ... 100 W
Rail mounting device, 4 rail units
ETS product family: Illumination
Product type: Dimmer
N **3901 REGHE**

Universal dimming actuator, 2-gang
2 x 300 W, HV LED lamps typ. 2 x 7 ... 60 W
Rail mounting device, 4 rail units
ETS product family: Illumination
Product type: Dimmer
N **3902 REGHE**

Universal dimming actuator, 4-gang
4 x 250 W, HV LED lamps typ. 4 x 7 ... 50 W
1 x 950 W
Rail mounting device, 8 rail units
ETS product family: Illumination
Product type: Dimmer
N **3904 REGHE**

DALI gateway
Rail mounting device, 4 rail units
with manual electronic operation and LED status indication
ETS product family: Illumination
Product type: Dimmer
N **2098 REGHE**

DALI transformer for LV halogen lamps
D SNT 105
35 ... 105 W
AC 230/240 V ~, 50/60 Hz

KNX – Actuators / Binary and analogue inputs

Ref.-no.

Control unit 1 – 10 V, 3-gang
Rail mounting device, 4 rail units
ETS product family: Illumination
Product type: Dimmer
2193 REG

Binary input, 4-gang
Rail mounting device, 2 rail units
4 inputs AC 110 ... 230 V ~
(different L conductors possible)
with status indicator
ETS product family: Input
Product type: Binary input
2114 REG

Binary input, 8-gang
Rail mounting device, 4 rail units
8 inputs AC 110 ... 230 V ~
(different L conductors possible)
with status indicator
ETS product family: Input
Product type: Binary input
2118 REG

Binary input, 8-gang
Rail mounting device, 4 rail units
8 inputs 12 ... 48 V AC/DC
with status indicator
ETS product family: Input
Product type: Binary input
2128 REG

KNX weather station "home"
2224 WH
Rated voltage AC/DC 24 V SELV
Power consumption 6.5 W
The power supply ref.-no.: WSSV 10
is necessary for precipitation detection.

Connection set
for weather station home ref.-no.: 2224 WH
for pole mounting
50 – 120 mm Ø **MM 100**
for edge mountingaluminium
(lacquered) **MW 270 AL**
for edge mounting, white **MW 270 WW**

KNX weather station
Rail mounting device, 4 rail units
ETS product family: Input
Product type: Analogue input 4-gang
2224 REG W
The weather station needs an operating voltage supply of 24 V AC. The latter can, for example, be provided by a power supply module (ref.-no. WSSV 10).

Analogue input, 4-gang
Rail mounting device, 4 rail units
ETS product family: Input
Product type: Analogue input 4-gang
2214 REG A
The analogue input needs a separate power supply, for example the power supply module ref.-no. WSSV 10.

KNX – Analogue inputs / Actuators FM

Ref.-no.

Analogue input extension module, 4-gang
Rail mounting device, 4 rail units
extension module for weather station and analogue input
2214 REGAM

Power supply AC 24 V ~
for weather station ref.-no.: 2224 REG W
for weather station home ref.-no.: 2224 WH
for analogue input ref.-no.: 2214 REGA
for analogue actuator ref.-no.: 2204.01 REGA
Rail mounting device, 4 rail units
WSSV 10

Combi sensor
WS 10 KS

Combi sensor with DCF77 receiver
WS 10 KSDCF

Wind sensor
WS 10 W

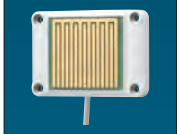

Rain sensor
WS 10 R

Brightness sensor
Rated voltage 24 V DC
range 0 ... 60000 Lux, linear
WS 10 H

Dawn sensor
Rated voltage 24 V DC
range 0 ... 255 Lux, linear
WS 10 D

Temperature sensor
Rated voltage 24 V DC
range -30 °C ... +70 °C, linear
WS 10 T

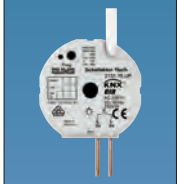

Flush-mounted switch actuator, 1-gang
with satellite input
1 make contact, 2 binary inputs
ETS product family: Output
Product type: Binary output
2131.16 UP

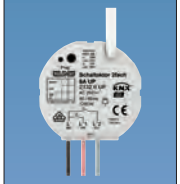

Flush-mounted switch actuator, 2-gang
with satellite input
2 make contacts, 2 binary inputs
ETS product family: Output
Product type: Binary output
2132.6 UP

KNX – Actuators FM / Accessories

Ref.-no.

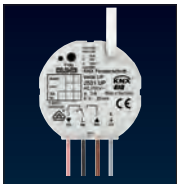

Flush-mounted room climate interface
with satellite input
3 binary inputs
1 blinds output, 1 output "TRIAC" (heating)
2531 UP

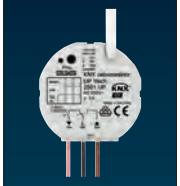

Flush-mounted blinds actuator, 1-gang
with satellite input
3 binary inputs
ETS product family: Shutter
Product type: Shutter
2501 UP

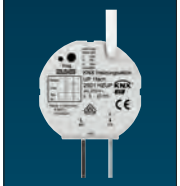

Flush-mounted heating actuator, 1-gang
with satellite input
3 binary inputs
1 output "TRIAC"
ETS product family: Heating, A/C, Ventilation
Product type: Valve
2501 HZ UP

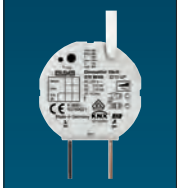

Flush-mounted dimming actuator, 1-gang, 50 – 210 W/VA
with satellite input
2 binary inputs
ETS product family: Illumination
Product type: Dimmer
3210 UP

Valve drive (motor-operated)
electromechanical servo drive
ETS product family: Heating, A/C, Ventilation
Product type: Valve
2176 SV

Push-button interface, 2-gang
ETS product family: Input
Product type: Binary input
2076-2 T

Push-button interface, 4-gang
ETS product family: Input
Product type: Binary input
2076-4 T

Radio-KNX converter
ETS product family: Communication
Product type: Radio
2700 AP

Bus connection block
red/black (for KNX) **2050 RT SW**
yellow/white **2050 GE WS**

Connection cover
for bus terminal of rail mounting devices
2050 K

KNX – Display / Reporting

Ref.-no.

Smart Control KNX
including KNX module
can be extended by means of a push-button extension module, ref.-no.: 409.. TSEM
SC 1000 KNX

Smart Control IP
including IP module
N **SC 1000 IP**

Flush-mounted power supply
for Smart Control KNX ref.-no.: SC 1000 KNX
and Smart Control IP ref.-no.: SC 1000 IP
(only 1 Smart Control per power supply)
NT 2405 VDC

Power supply for rail mounting
for Smart Control KNX ref.-no.: SC 1000 KNX
and Smart Control IP ref.-no.: SC 1000 IP
(max. 10 Smart Controls per power supply)
Rail mounting device, 4 rail units
NT 2415 REG VDC

Facility Pilot Server
Rail mounting device, 8 rail units
without display
fanless, without rotating parts
English **FAPV SERVER REG GB**

Power supply for rail mounting
for Facility Pilot Server ref.-no.: FAPVSERVERREGGB
Rail mounting device, 4 rail units
NT 2415 REG VDC

Ref.-no.

Smart Pilot
aspect ratio 16:9
for installation in walls, resistive touch screen
fanless, without rotating parts
switched-off PC can be activated via LAN (wake on LAN)

25.6 cm – 10.1´´	**SP 10 FAPVD-GB**
39.6 cm – 15.6´´	**SP 15 FAPVD-GB**
47 cm – 18.51´´	**SP 19 FAPVD-GB**

Technichal Data

SP 10 FAPVD-GB	
Screen size (W x H):	223 x 125 mm
Screen diagonal:	256 mm / 10.1´´
Resolution:	WSVGA (1024 x 600), LED backlight display
SP 15 FAPVD-GB	
Screen size (W x H):	344.2 x 193.5 mm
Screen diagonal:	396.2 mm / 15.6´´
Resolution:	WXGA (1366 x 768)
SP 19 FAPVD-GB	
Screen size (W x H):	409.8 x 230.4 mm
Screen diagonal:	470.1 mm / 18.51´´
Resolution:	WXGA (1366 x 768)
Start/reset button:	accessible from the front
Operating system:	Windows Embedded Standard 2009, 7 languages pre-installed
Software:	JUNG Facility Pilot full version pre-installed
DIVUS video phone software for integration of DCM devices pre-installed	
Remote maintenance:	possible via internet/LAN
Loudspeaker:	integrated
Microphone:	integrated
Processor:	Intel® Atom™ N450, 1.66 GHz, 512 K L2 Cache
Memory:	Industrial CF 4 GB, RAM 2 GB
USB ports:	2 at the reverse side, 2 accessible from the front
LAN connections:	2 (separate) at the reverse side, 1000 Mbit/s
Rated voltage:	AC 90 ... 260 V ~, 50/60 Hz

Webcam
for Smart Pilot ref.-no.: SP 10 FAPVD-GB, SP 15 FAPVD-GB, SP 19 FAPVD-GB
to plug onto the design frame (not possible if frame is flush with the wall)
SP CAM

WLAN module
for Smart Pilot ref.-no.: SP 10 FAPVD-GB, SP 15 FAPVD-GB, SP 19 FAPVD-GB
SP WLAN
Plug-in card, supports standard 802.11b/g

KNX – Display / Reporting

Ref.-no.

Frame
for Smart Pilot ref.-no.: SP 10 FAPVD-GB
333 x 200 mm
white (dyed glass) **R SP 10 WW D**
black (dyed glass) **R SP 10 SW D**

Frame
for Smart Pilot ref.-no.: SP 15 FAPVD-GB
510 x 306 mm
white (dyed glass) **R SP 15 WW D**
black (dyed glass) **R SP 15 SW D**

Frame
for Smart Pilot ref.-no.: SP 19 FAPVD-GB
600 x 345 mm
white (dyed glass) **R SP 19 WW D**
black (dyed glass) **R SP 19 SW D**

Flush-mounted recessed box
for Smart Pilot ref.-no.: SP 10 FAPVD-GB
cut-out dimensions (W x H): 315 x 182 mm
installation depth: 80 mm **SP 10 EBGD**
for Smart Pilot ref.-no.: SP 15 FAPVD-GB
cut-out dimensions (W x H): 492 x 288 mm
installation depth: 80 mm **SP 15 EBGD**
for Smart Pilot ref.-no.: SP 19 FAPVD-GB
cut-out dimensions (W x H): 582 x 327 mm
installation depth: 80 mm **SP 19 EBGD**

Installation kit for hollow walls
(Flush-mounted recessed box is not required for hollow wall installation.)
for Smart Pilot ref.-no.: SP 10 FAPVD-GB
max. space needed at the rear: 345 x 212 x 80 mm
installation depth: 80 mm **SP 10 TBKD**
for Smart Pilot ref.-no.: SP 15 FAPVD-GB
max. space needed at the rear: 522 x 318 x 80 mm
installation depth: 80 mm **SP 15 TBKD**
for Smart Pilot ref.-no.: SP 19 FAPVD-GB
max. space needed at the rear: 612 x 357 x 80 mm
installation depth: 80 mm **SP 19 TBKD**

Installation kit for hollow walls
for installation flush with the wall
(Flush-mounted recessed box is not required for hollow wall installation.)
for Smart Pilot ref.-no.: SP 10 FAPVD-GB
cut-out dimensions (W x H): 328 x 196 mm
installation depth: 90 mm **SP 10 WEBKD**
for Smart Pilot ref.-no.: SP 15 FAPVD-GB
cut-out dimensions (W x H): 506·x·302 mm
installation depth: 90 mm **SP 15 WEBKD**
for Smart Pilot ref.-no.: SP 19 FAPVD-GB
cut-out dimensions (W x H): 596 x 341 mm
installation depth: 90 mm **SP 19 WEBKD**

Ref.-no.

Smart Pilot
JUNG Facility Pilot full version pre-installed
aspect ratio 16:9
for installation in walls, resistive touch screen
fanless, without rotating parts
SP 9 FAPVE-GB

Frame
for Smart Pilot ref.-no.: SP 9 FAPVE-GB
for Smart Panel ref.-no.: SP 9 KNX
aluminium **R 9 AL E**
stainless steel **R 9 ES E**
glass green **R 9 GL E**
glass white **R 9 GL WW E**
glass black **R 9 GL SW E**
Dimensions: 327.5 x 250.5 x 5 mm (W x H x D)

Flush-mounted recessed box
for Smart Pilot ref.-no.: SP 9 FAPVE-GB
for Smart Panel ref.-no.: SP 9 KNX
cut-out dimensions (W x H): 212 x 124 mm
installation depth: 75 mm
EBG 24

Facility Pilot software
Planner version **FAP-PL-3-GB**
Download only on JUNG website www.jung.de/en/software
Licence after online registration.

Facility Pilot software
50 data point version **FAP-50-3-GB**
300 data point version **FAP-300-3-GB**
Full version **FAP-FULL-3-GB**
Software versions for network application (only in connection with FAP full version)
Please note: 1 licence per PC!
Client version **FAP-CL-3-GB**
Please note: 1 licence per PC!
OPC editor **OPC-EDITOR**
Note: The software is locked with a software key and must be activated within 20 days after the installation.

JUNG App Smart Remote
APP-LIZENZ
The JUNG Smart Remote App runs only in connection with the JUNG software Facility Pilot. A free download of the app is available on the iTunes Store
In connection with the Facility Pilot, the free app visualizes two screen pages on an iPhone / iPod touch or iPad.
A full licence for unlimited numbers of pages is available with Smart Remote Licensing. To purchase a licence please register at www.jung.de/software

Facility Pilot Navigator
SMART-ASSISTENT
Download only on JUNG website www.jung.de/en/software
Licence after online registration.
Facility Pilot Navigator is a planning software for home automation, based on the KNX technology, JUNG GUI and JUNG Facility Pilot. The realization of visualization projects is greatly simplified.
The Facility Pilot Navigator introduces a new way of planning, based on the JUNG GUI. Worksheets and Controls for the Facility Pilot can be created automatically. If the JUNG group address structure (*.csv) is used, corresponding lists of group addresses will be generated.
Client/server system
Requirements for server: Windows 7 Professional
Requirements for client: Browser suitable for HTML5

KNX – Display / Reporting

Ref.-no.

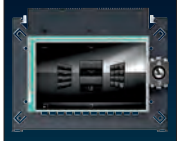

Smart Panel
with integrated BCU
aspect ratio 16:9
for installation in walls, resistive touch screen
fanless, without rotating parts
SP 9 KNX

The subsequent installation of customer-specific software (Skype, Office applications, camera, softphone, etc.) is not allowed, due to limited storage capacity of the device. Video phone software to connect to the JUNG door communication is not available. The use of the archiving function requires the use of external storage media.

Technichal Data

Rated voltage:	AC 110 ... 230 V ~, 50/60 Hz
Standby power:	max. 1 W
Power consumption:	max. 20 W
Power consumption (Display off):	max. 8 W
Operating system:	Windows® Embedded Standard 2009
Processor:	Intel® AtomTM Z510, 1.1 GHz
L2 cache:	512 kB
Mass storage:	2 GB SSD
Main memory:	1 GB RAM
Screen diagonal:	229 mm / 9´´, aspect ratio 16:9
Resolution:	WVGA (800 x 480)
Number of colours:	16,7 Millionen
Viewing angle:	± 85 °
Touchscreen:	resistive
Camera resolution:	1.3 million pixels
Loudspeaker:	integrated
Microphone:	integrated
Audio output:	Line-out (Stereo)
Audio input:	Line-in (Stereo)
Video input:	FBAS/CVBS, 1 VSS
Slot for memory card:	SDHC, max. 32 GB
USB version:	1.1/2.0
Connection:	3 x Typ A
Service interface connection:	Mini-USB type AB, 5-pole
Network type:	10/100 MBit/s Ethernet
Network connection:	RJ45-socket 8/4-pin
Dimensions W x H x D:	283 x 117 x 65 mm (without design frame)
Dimensions screen W x H:	195 x 118 mm

Frame
for Smart Pilot ref.-no.: SP 9 FAPVE-GB
for Smart Panel ref.-no.: SP 9 KNX

aluminium	**R 9 AL E**
stainless steel	**R 9 ES E**
glass green	**R 9 GL E**
glass white	**R 9 GL WW E**
glass black	**R 9 GL SW E**

Dimensions: 327.5 x 250.5 x 5 mm (W x H x D)

Flush-mounted recessed box
for Smart Pilot ref.-no.: SP 9 FAPVE-GB
for Smart Panel ref.-no.: SP 9 KNX
cut-out dimensions (W x H): 212 x 124 mm
installation depth: 75 mm
EBG 24

Ref.-no.

Colour touch panel IP
Intelligent building control
with active colour TFT touch screen
FP 701 CT IP

FP 701 CLIENT
App for iPhone, iPad and iPod touch
Requires iOS 4.2 or higher
Only available in iTunes App Store

- App for the remote control of all functions of the Colour Touch Panel IP
- Possibility to test the app "live" on your KNX system with all functions
- Limitations with unlicensed version:
  – run time limited to 15 minutes
  – your personal project will be loaded at each program start
- License for full version of app can be purchased directly as "in-app-purchase"

Frame
for colour touch panel IP ref.-no.: FP 701 CT IP

aluminium	**FP AL 781**
stainless steel	**FP ES 781**
glass green	**FP GLAS 781**
glass white	**FP GLAS 781 WW**
glass black	**FP GLAS 781 SW**

Frame
for colour touch panel IP ref.-no.: FP 701 CT IP
industrial version
anthracite **FPI 781 AN**

Flush-mounted recessed box
for colour touch panel IP ref.-no.: FP 701 CT IP
cut-out dimensions (W x H): 212 x 124 mm
installation depth: 75 mm
EBG 24

Signal panel
ETS product family: Display
Product type: Signal panel

glass green	**MBT 2424**
glass white	**MBT 2424 WW**
glass black	**MBT 2424 SW**

The glass panel with aluminium housing is equipped with 24 capacitive sensor buttons and 24 status LEDs.

Technichal Data
External power supply

Rated voltage:	AC/DC 24 V SELV
Power consumption:	approx. 2.2 W
Dimensions (W x H x D):	front plate approx. 236 x 156 x 14 mm
Installation depth:	approx. 38 mm
Protection level:	IP 54 (flush-mounted) IP 20 (surface-mounted)

Surface-mounted housing
for signal panel ref.-no.: MBT 2424 ..
EBG 2424

Technical Data
Dimensions (W x H x D): 236 x 156 x 52 mm
Colour: light grey (similar RAL 7035)
Protection level: IP 20

Flush-mounted power supply
for signal panel ref.-no.: MBT 2424 ..
for Smart Control KNX ref.-no.: SC 1000 KNX
and Smart Control IP ref.-no.: SC 1000 IP
NT 2405 VDC

KNX – Multimedia

Ref.-no.

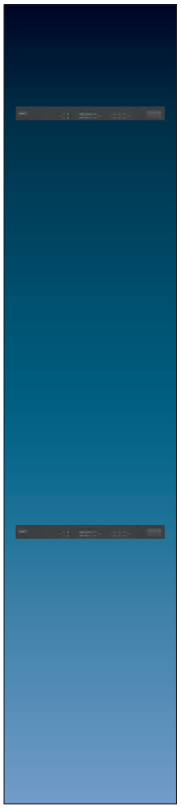

Multiroom amplifier
with integrated BCU
4 outputs
housing made for the installation into 19" racks
N **MR-AMP 4.4**

Product characteristics
- Operation via KNX or via buttons on the front of the device
- Audio matrix with integrated amplifiers
- Independent sound exposure of 4 zones
- 4 stereo inputs (AF signal)
- 4 loudspeaker outputs
- 2 stereo outputs (AF signal)
- Expandable due to modular structure
- Integrated bus coupling unit
- Status indicator

Multiroom amplifier
with integrated BCU
8 outputs
housing made for the installation into 19" racks
N **MR-AMP 4.8**

Product characteristics
- Operation via KNX or via buttons on the front of the device
- Audio matrix with integrated amplifiers
- Independent sound exposure of 8 zones
- 4 stereo inputs (AF signal)
- 8 loudspeaker outputs
- 2 stereo outputs (AF signal)
- Expandable due to modular structure
- Integrated bus coupling unit
- Status indicator

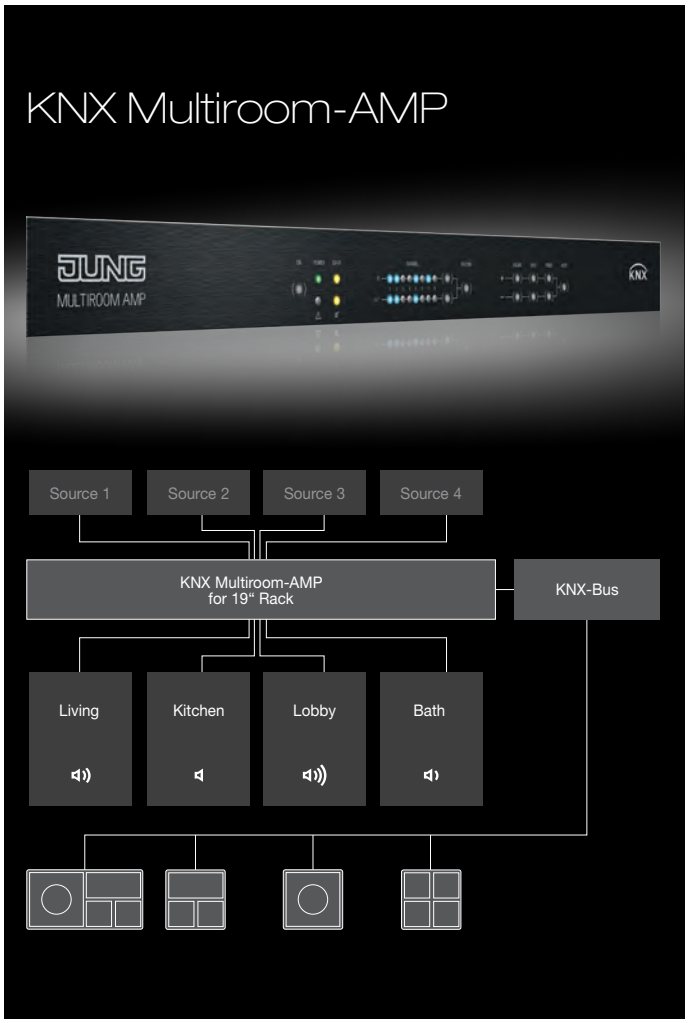

KNX – Alarm

Ref.-no.

Alarm central unit
ETS product family: Alarm system
Product type: Central alarm unit
white **EAM 4000**
Operating voltage:
AC 230 V ~ ± 10 %; 50/60 Hz

Spare battery (rechargeable)
for KNX Alarm central unit ref.-no. EAM 4000
12 V/1.2 Ah **DAS 4512**

Outdoor siren with flash light
DAS 4110
Operating voltage: 12 V DC
Protection level: IP 34

Indoor siren
DAS 4120
white
Operating voltage: 10 ... 28 V DC
Protection level: IP 32

Key switch/push-button
for activating and deactivating of alarm systems
Surface-mounted **DAS 4300 A**
Housing, front plate: diecast aluminium
Colour: white, similar RAL 9010
Flush-mounted **DAS 4300 U**
Housing, front plate: precision cast aluminium

Locking cylinder for key switches
suitable for IP 44 with 3 keys
different locks **28**
equal locks **28 G1**
Key
for locking cylinder 28 G1
(Spare part) 1 piece **28 G1 SL**

Locking unit
DAS 4370

Movement detector
PIR detection
DAS 4210
Detected angle: 90° (volumetric)
34 double zones in 3 level
Max. detected area: approx. 15 x 15 m

Frame joint switch contact
DAS 4360

Glass-break sensor, passive
white (similar RAL 9010) **FUS 4415 WW**

Magnet contact
white (similar RAL 9010) **FUS 4410 WW**
brown **FUS 4410 BR**

F 50 Universal push-button module

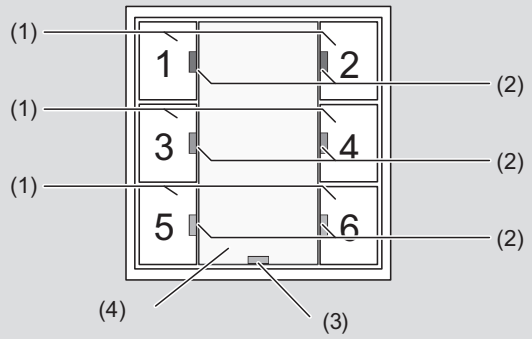

Figure 1: Front view, universal pushbutton module, 3-gang

(1) 6 control surfaces configurable as rocker
(2) 6 status LEDs (red, green, blue) / one LED per button.
(3) 1 operation LED (red, green, blue)
(4) Illuminable labelling field (white)

Product characteristics

- Push-button functions for switching, dimming, blinds control, valuators, light scenes, etc.
- One or two functions per button
- To be completed with cover kit
- Illuminated inscription field
- One status LED per button, red, green or blue, adjustable
- One operation LED as orientation light and programming status – red, green or blue, adjustable
- Brightness of status LED, operation LED and inscription field adjustable, can be changed during operation, e.g. during night times
- Measurement of room temperature
- Extension unit for room temperature controller
- Inhibit function: Inhibit or function mode change of single or all button functions
- Alarm function, optional acknowledge by pressing any button
- Energy saving mode
- Transparent cover kit (included) for temporary site use without design covers
- Integrated bus coupling unit
- Connection for a push-button extension module, 1-4 gang

Room temperature controller extension

In connection with a room temperature controller, equipped with a 1-byte object for switch-over of operating modes, the device can be used as a full-featured controller extension. The device can also be used for presence detection or for setpoint shifting purposes.

Measurement of the room temperature

The device contains a temperature sensor. The determined room temperature can be displayed e.g. by a visualisation or otherwise is evaluated by an room temperature controller as an external temperature value.
Determination of the room temperature can be further improved if a temperature sensor sends its measured value to the device.
The resulting room temperature is yielded by the averaging of the individual temperature values, whereby the weighting of internal and external values can be specified.

Energy saving mode

The device has an energy saving mode to save electrical energy during operation.
If the function is used, the device switches to the energy saving mode after a preset time without operation or controlled by an external telegram to a separate object, and switches off the signalling function of the device.
The energy saving mode can be deactivated by an operation or by a special telegram. Afterwards, the device is fully functional again.

Lighting and LED functions

The universal push-button modules have one status LED for each control surface.
The status LEDs are executed in three colours and can – according to choice, in either red green or blue – be switched on or off permanently or can function as an operation indication or as status indication.
As an alternative, with the aid of separate communication objects, they can signal widely varying display information completely independently of the push-button function, e.g. operation states of fault messages or also room temperature controllers, the results of logic value comparisons, flash or be permanently switched on or off. Each colour of a status LED can be controlled either by three separate objects or alternatively by a mutual object (superimposed function), so that traffic light functions can also be implemented, – for example, depending on a limiting value – by means of an LED.
The large labelling field offers space for the convenient labelling of the push-button functions and can be lit in white where needed.
Depending on the programming, the lighting can be permanently switched on as orientation lighting, or else only by pressing a button for a parameterised time. A flash signal can also be used e.g. as an alarm message.
An operation LED can either serve as an orientation light (also flashing), or can be activated via a separate communication object. In programming operating mode, the operation LED flashes permanently with a frequency of approx. 8 Hz. The brightness of all the displays can be set in six stages, using a common parameter. A separate communication object allows the brightness to be reduced, e.g. during night hours.

Push-button module – Connecting and mounting

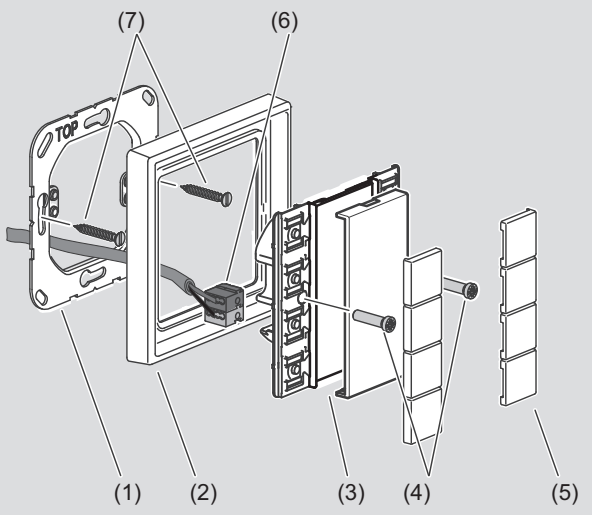

Figure 2: Assembling the push-button sensor module

(1) Supporting frame
(2) Design frame
(3) Sensor module
(4) Fastening screws
(5) Design covers
(6) KNX connection terminal
(7) Wall box screws

Programming the physical address

The push-button module does not have a separate programming button or LED. Programming mode is activated by a defined and time-delayed press of the upper left and lower right of the push-button.
Programming mode is signalled by flashing operation LEDs on the basic and extension modules. To program the physical address, the decorative cover can be snapped onto the device.

Activate Programming mode

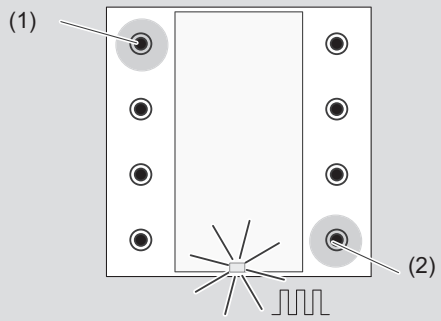

Figure 3: Buttons for activating Programming mode

Press and hold down the push-button at the top left of the basic device (1). Then press second push-button at the lower right (2). Programming mode is activated. The operation LED (1) on module flashes quickly (approx. 8 Hz).

Push-button extension module

The number of push-buttons of the device can be expanded to include up to 8 additional buttons, by connecting an extension module to the basic device. Configuration and commissioning of the extension module are clearly structured and easy to perform using the application program of the basic device.
The connection between the pushbutton sensor module and the extension module is made using a two-wire cable (e.g. separate cable) and can be up to 30 metres long.

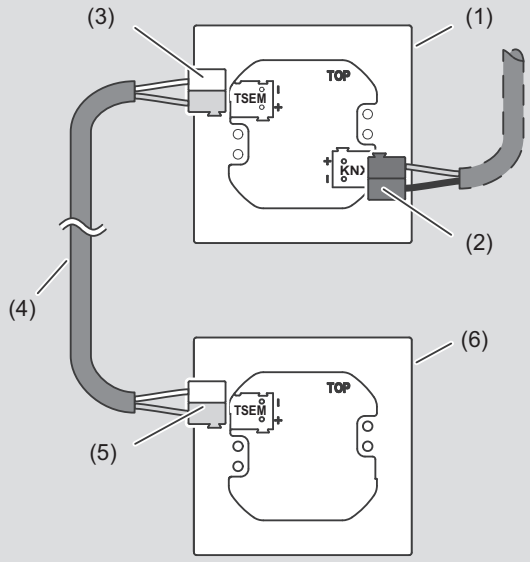

Figure 4: Connection of the extension module

(1) Push button module Universal
(2) KNX connection terminal
(3) Terminal for connecting an extension module, white-yellow
(4) Connection for push-button extension module (max 30 m)
(5) Terminal for extension module, white-yellow
(5) Push-button extension module

Room controller display (RCD) module, 2-gang (.. 4092 M ..)

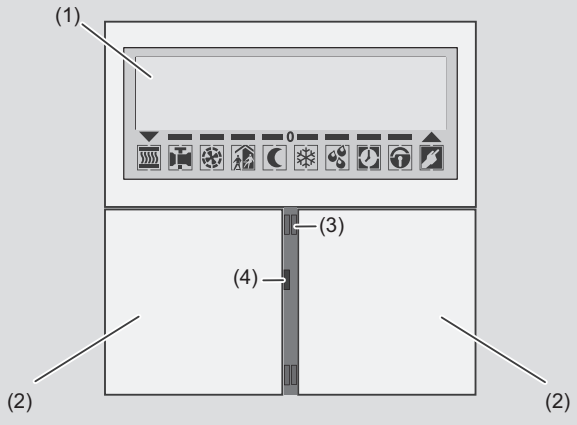

Figure 1: Device components, front side

(1) LED display (OLED)
(2) Control surfaces (rockers 1...2)
(3) Status LED (2 x per control surface)
(4) Operation LED

Product characteristics

- Push-button functions for switching, dimming, blinds control, valuators, light scenes, etc.
- Vertical and horizontal key/rocker functions
- Two red LEDs per control key as status or operation indicators
- Display of values and texts
- Running text display for one or two messages with max. 14 characters
- Integrated room temperature controller
- Room temperature control with setpoint value preset
- Display of room temperature and setpoint temperature
- Indication of outside temperature (only with external sensor)
- Integrated bus coupling unit
- In combination with Facitility Pilot "Multi-Room Control": music play control, display of music titles, artists, etc.
- Display unit for the KNX central alarm unit
- Connection for a push-button extension module, 1-4 gang

Room temperature controller functionality

The device can be used for single-room temperature control.
Depending on the operating mode, the current temperature setpoint and on the room temperature, a command value for heating or cooling control can be sent to the KNX/EIB for the control circuit. In addition to the heating or cooling basic level, activating an additional heater and/or cooling unit means that an additional heating or cooling unit can be used. In this connection, you can set the temperature setpoint difference between the basic and the additional level by a parameter in the ETS.
For major deviations between the temperature setpoint and the actual temperature, you can activate this additional level to heat up or cool down the room faster. Y
ou can assign different control algorithms to the basic and additional stages. For heating and cooling functions, you can select continuous or switching PI or switching 2-point feedback control algorithms.
The room temperature can be recorded either by the internal or by an external temperature sensor. Combined temperature recording by both sensors can also be configured. The controller distinguishes between different operating modes (comfort, standby, night, frost/heat protection) each with their own temperature setpoints for heating or cooling.

Display functionality

The upper part of the device display (OLED) has a graphics area of 132 x 30 pixels. This can display one, two or three lines of text (time, date, temperatures, formatted and unformatted values), as well as large graphical icons (30 x 30 pixels).
30 graphic symbols are predefined in the device memory to show weather situations, the indoor or outdoor temperature, timer, shade or multimedia system, for example. The large symbols can be configured as necessary in the ETS and can also be switched via the bus using communication objects.
In addition, information texts can also be shown in the graphic area of the display.
This info mode can be used to give the user help texts about how to use the control surfaces when a button is pressed on the display (intelligent nameplate).In the bottom part of the display, there are permanently defined small symbols which display the various operating modes of the ambient temperature controller or the controller extension as well as the status of external timer channels and the information text mode.
The display possesses switchable and dimmable backlighting.

Mounting and connecting the device

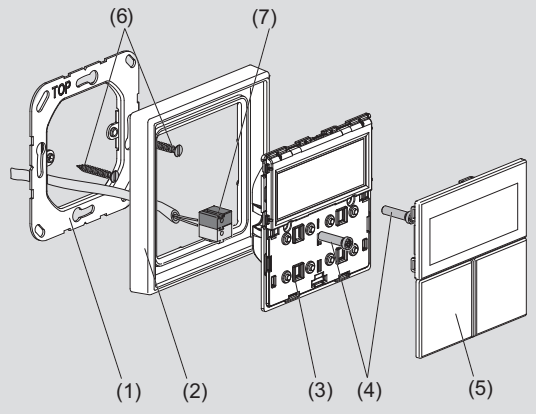

Figure 2: Assembling the RCD

(1) Supporting frame
(2) Design frame
(3) Room controller module
(4) Fastening screws (plastic)
(5) Design control surfaces
(6) Box screws
(7) KNX connection terminal

Activate Programming mode

Press button at the top left of rocker 1 (01) and keep it depressed.
Then press the second button at the bottom right of rocker 1 (02).
Programming mode is activated. The operation LED (03) flashes quickly (approx. 8 Hz). The text "Programming mode" is shown in the display of the device along with the device type and the version of the device firmware.

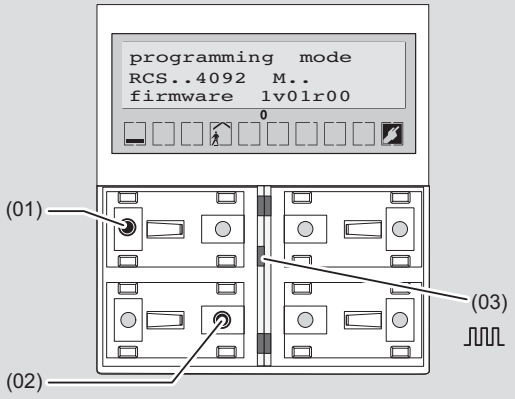

Figure 3: Buttons for activating Programming mode

Presence detector Standard / Universal (3361 .. / 3361-1 ..)

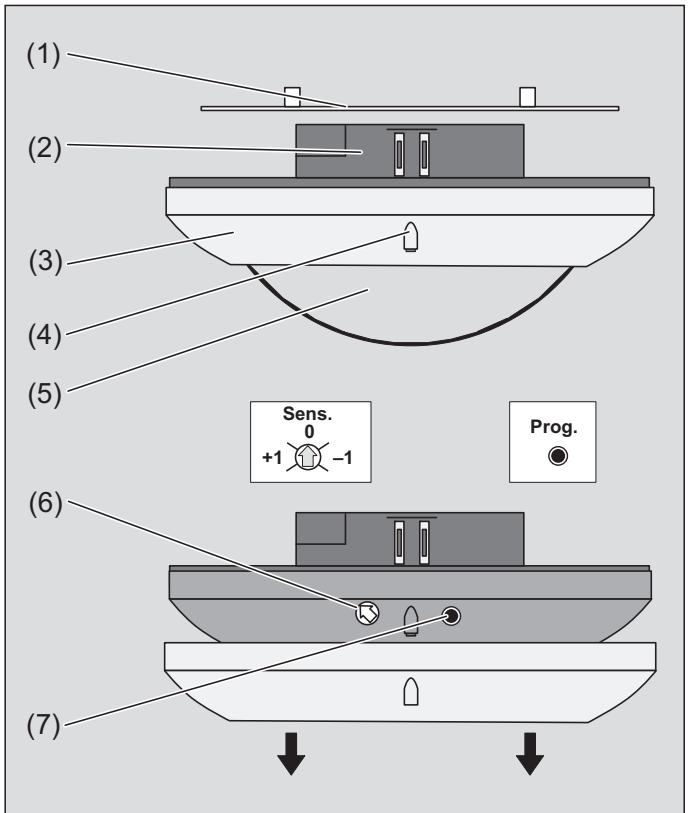

Figure 1: Device components

(1) Supporting frame
(2) Integrated bus coupling unit
(3) Decor ring
(4) Brightness sensor
(5) Sensor window with red programming LED and blue status LED
(6) Adjuster (Sens.) for manual sensitivity adjustment
(7) Programming button (Prog.)

Product characteristics

- Integrated bus coupling unit
- 3 PIR sensors
- Detection field 360°
- Integrated brightness sensor
- Deployed as presence detector, motion detector, or for alert operation
- Output functions: Switching, staircase function, switching with forced position, value transmitter, light scene extension, operating mode setting for room temperature controller
- Detection area extendible by parallel switching of several devices as main unit or extension unit
- Adjuster for manual adjustment of sensitivity
- Status LED: Flashes during motion detection; depending on programming in normal operation or only during the walking test mode

Additional characteristics of "Universal" version

- Manual operation with IR remote control possible (accessories)
- 5 function blocks for motion or presence detection each with 2 outputs
- Function blocks switchable, e.g. for day/night operation
- PIR sensors can be evaluated separately
- Brightness sensor function with 3 limiting values
- Light control with max. of 3 channels, setpoint shift in operation, separate configuration of dimming-up, control and dimming-down phase
- Light control can be combined with presence detector function

Presence detector function

- Detection of the smallest motions e.g. at a workplace for detecting the presence of persons
- Switch on: Motion detection and brightness threshold not reached
- Switch off: No motion in the detection field and run-on-time elapsed or brightness threshold exceeded

Presence detector function

- Detection of motions for passageway security in buildings
- Switch on: Motion detection and brightness threshold not reached
- Switch off: No motion in the detection field and run-on-time elapsed

Alert operation

- Brightness-independent detection of motions in the detection field
- Switch on: After detection of an adjustable number of motions within the set monitoring period
- Switch off: No persons in the detection field and run-on-time elapsed

Manually changing settings with IR remote control

If enabled, individual settings for function block 1 can be changed during operation using a remote control.
The manual adjustment of sensitivity by the adjuster is overwritten by the IR-remote control and vice versa.
Possible settings: Increase sensitivity, Decrease sensitivity, Recall set sensitivity again, Brightness threshold, Run-on-time

Detection field and range

The device has a detection area of 360°. The diameter of the detection area depends on the installation height and the direction of motions of persons in the detection area.
The detection area becomes larger the greater the installation height, while the detection density and sensitivity are reduced at the same time.

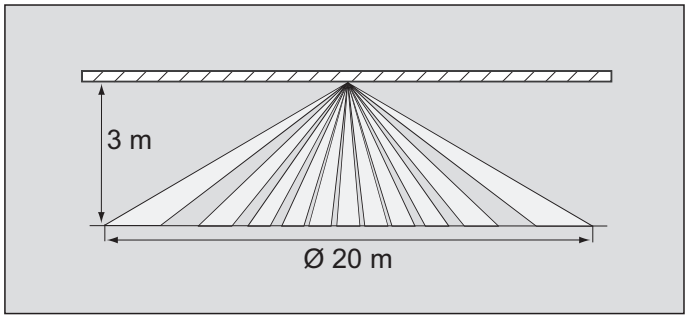

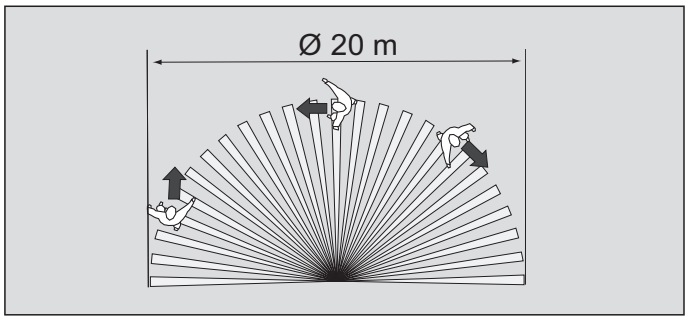

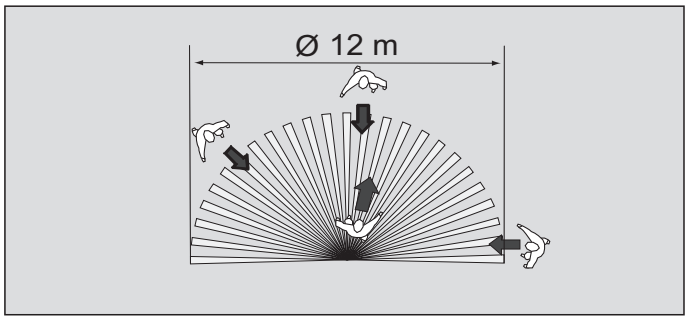

Installation height	Range on the ground	Range at table level
2.20 m	Ø approx. 14.5 m	Ø env. 8 m
2.50 m	Ø approx. 16.5 m	Ø approx. 10 m
3.00 m	Ø approx. 20 m	Ø approx. 12 m
3.50 m	Ø approx. 23 m	Ø approx. 14 m
4.00 m	Ø approx. 26 m	Ø approx. 14.5 m
5.00 m	Ø env. 28 m	Ø approx. 15 m

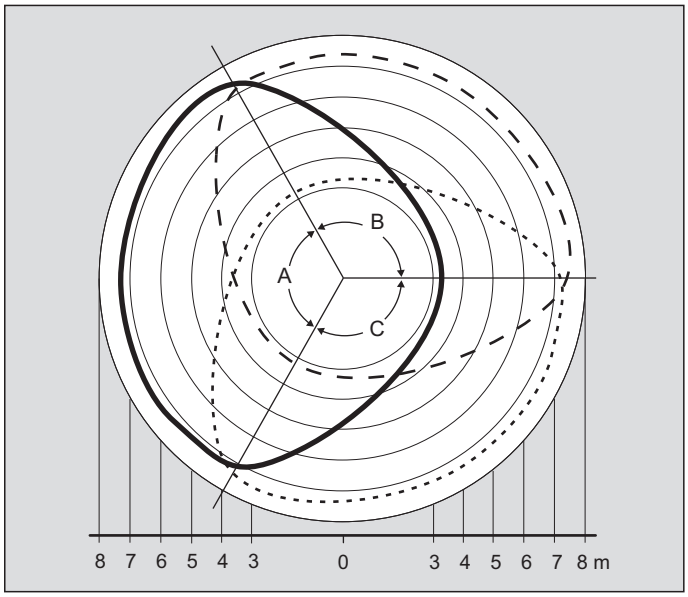

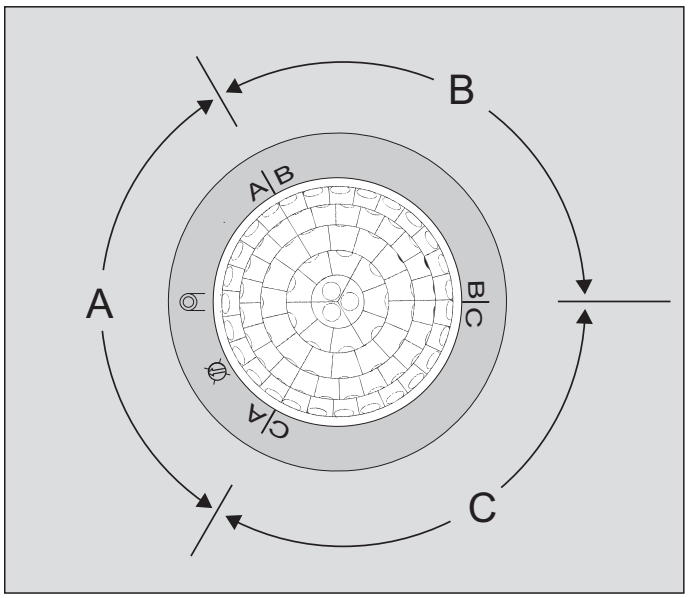

When mounting the device, align it so that the alignment of areas A, B and C match the projection.
Already pay attention to correct alignment when mounting the appliance box and supporting frame.

One system for all functions

Advantages/Benefits

Convenience

- automatic control
- sensor technology
- central operation via visualisation/ panelboards of the master key system
- time-dependent control using clocks
- remote control
- telephone connection

In the following areas of application

- lighting
- security
- sun protection
- shutters
- heating
- ventilation

Functional reliability

- central, electronic master key system
- coded keys
- alarm functions
- time-dependent control
- presence simulation
- telephone connection

Emotional Aspects

Feeling of safety

- central combination of the functions
- automatic lighting control using observer/ automatic switch/timer
- shutters/security grilles etc.
- sensor technology, door/window contacts, humidity/wind sensor
- missing keys are disabled (with an electronic master key system)

Comfort

- individual temperature settings
- sun protection
- controlled ventilation
- visual protection with shutters and blinds
- lighting aspects, light scenes, localised lighting

Economical Aspect

- automatic and interconnected building functions enable a reduction in energy consumption

The functions that are described can be used both in residential and functional buildings.

Entering the building:

The master key system automatically triggers the following functions:

Information is displayed on mini panelboards

- key recognition, name
- the occupants of the building
  Alarm functions are switched off
- observer is disabled
- automatic switch is disabled

Shutters are raised

- can each be controlled manually

Room lighting can be switched/dimmed

- automatic brightness control
- individual lighting

Textile sun blinds in operation

- automatic control via sun sensors
- in the event of wind or rain, blinds are automatically retracted using sensor technology
- individual manual intervention

Individual room control

- from night reduction to individual temperature settings
- when the windows are opened, a reduction in the temperature is automatically triggered by the window contacts

Skylights

Ventilation

Leaving the building:

The master key system automatically triggers the following functions:

Triggering of central functions via a coded key

Alarm functions when system is set

- observer is enabled
- automatic switch
- window contacts are included
- alarm signals via telephone

Shutters are closed

Room lighting is switched off

Textile sun blinds are retracted

Individual room control

- night reduction

Skylights are closed

Ventilation is switched off

B-GB-KNX-SHORT 1013 4 011377 031074

ALBRECHT JUNG GMBH & CO. KG
P.O. Box 1320
D-58569 Schalksmühle
Germany

Tel.: +49 2355 806-553
Fax: +49 2355 806-254
E-mail: mail.vka@jung.de
Internet: www.jung.de

For sales contacts in your country see:
www.jung-salescontact.com

Certified proof of
origine „Made in Germany“
by TÜV NORD.

TÜV NORD
TÜV NORD CERT GmbH
Made in Germany
Formelle Produktprüfung gem. TN-Standard AFZ-2018